MICRO SWITCH
a Honeywell Division
FED. MFG. CODE 91929

RAILWAY CLAMP
(SINGLE MOUNT)

CATALOG LISTING
RDS-CL-01

THIS DRAWING COVERS A PROPRIETARY ITEM AND IS THE PROPERTY OF MICRO SWITCH. A DIVISION OF HONEYWELL. THIS DRAWING IS NOT TO BE COPIED OR USED WITHOUT THE APPROVAL OF MICRO SWITCH

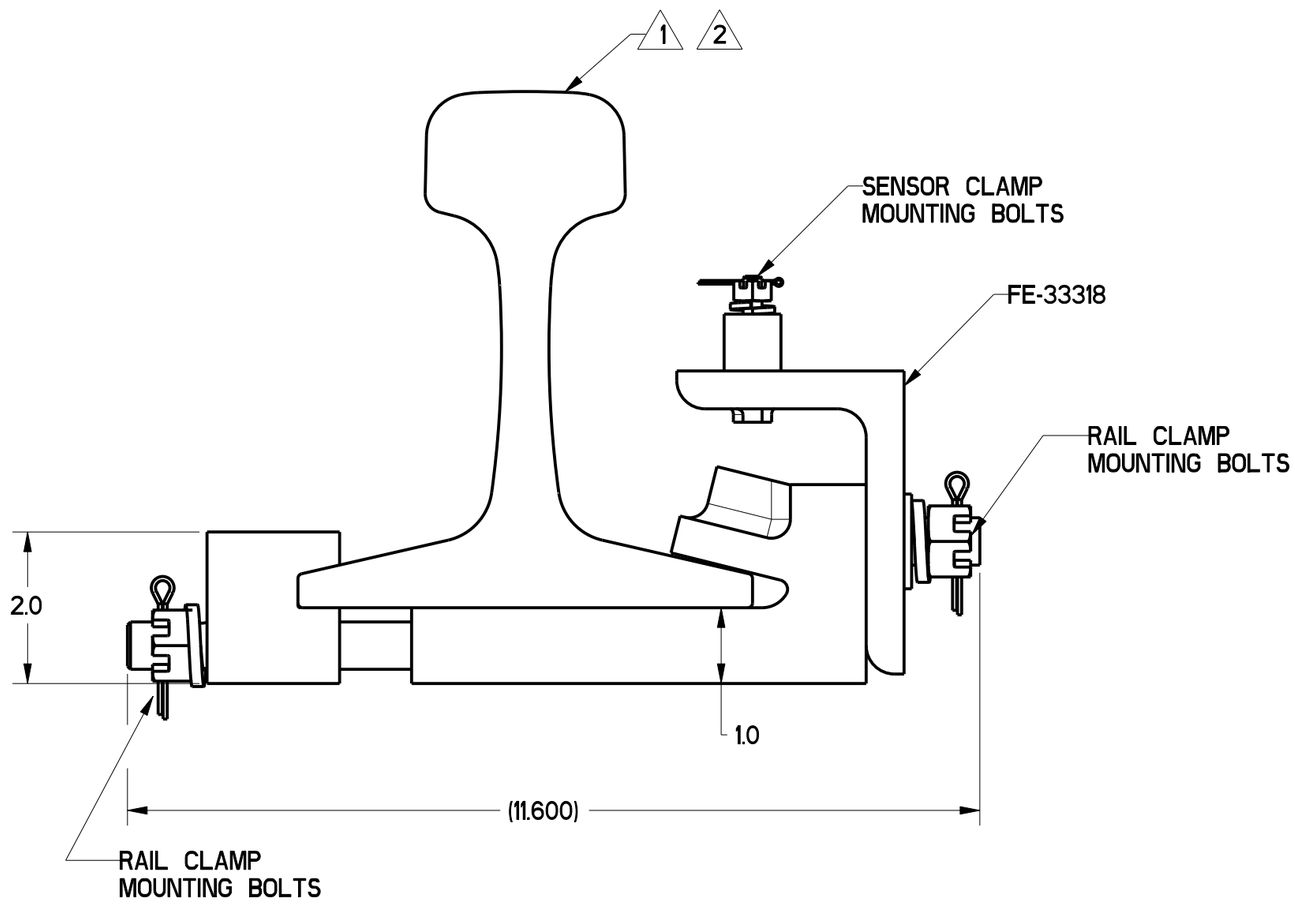

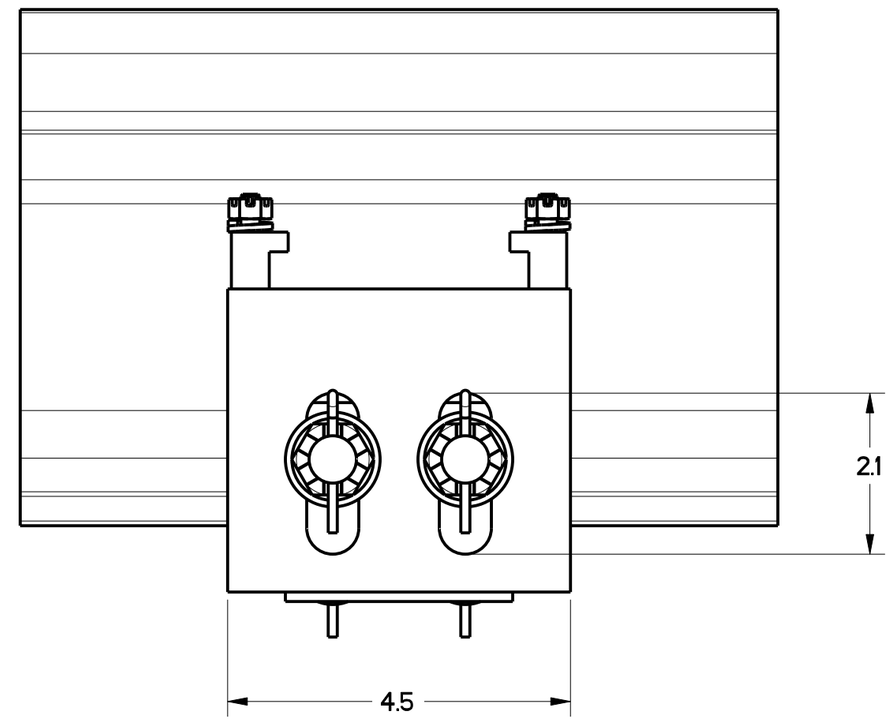

NOTES
1. DESIGNED TO BE MOUNTED ON RAILS : 119RE, 132RE, 133RE, 136RE, AND 140RE
2. RAIL SECTION SHOWN FOR ILLUSTRATION PURPOSES ONLY

MECHANICAL SPECIFICATIONS :

OPERATING TEMPERATURE : -40°C TO 85°C

SHOCK : 500g, HALFSINE 1.6 mSEC (IEC68-2-27)

VIBRATION : SINUSOIDAL 10-2000 Hz, 20G, (IEC68-2-6)
30 MINUTES EACH AXIS FOR TEMPERATURES -40°C, 25°C, AND 85°C

MOUNTING TORQUE:

RAIL CLAMP MOUNTING BOLTS : 60 FT-LBS
SENSOR CLAMP MOUNTING BOLTS : 7 FT-LBS

THIRD ANGLE PROJECTION

SCALE NONE

DO NOT SCALE PRINT

UNLESS OTHERWISE SPECIFIED TOLERANCES ARE

ONE PLACE	(.0)	±.030
TWO PLACE	(.00)	±.015
THREE PLACE	(.000)	±.005
ANGLES		±

WEIGHT

ANSI Y14.5M-1982 APPLIES

RDS-CL-01
CATALOG LISTING
PAGE 1 OF 1
RELEASE NO. DR-4961
REPLACES
ISSUE 5
CHECK
REVISIONS

A	REL DWG PR-22500	WJC 5 MAR 97
B	CO 84675	GRT 5 JUN 97
C	CO 95151	S A V 21 JUN 99
D	0002417	JLH 22DEC03

CHECK
4 MAR 97
WJC
CHECK
4 MAR 97
WJC
DRAWN
PTC/CAD