MICRO SWITCH
a Honeywell Division
FED. MFG. CODE 91929

SWITCH - ENCLOSED

CATALOG LISTING
602EN27-RB

CUSTOMER PART NUMBER
6-0349-1

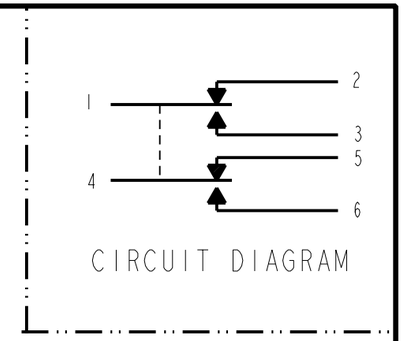

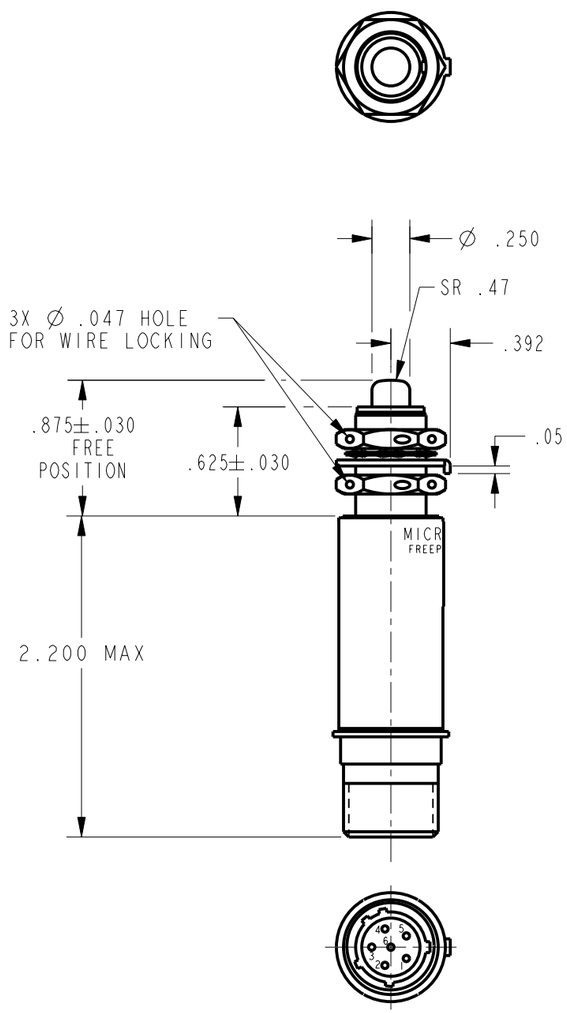

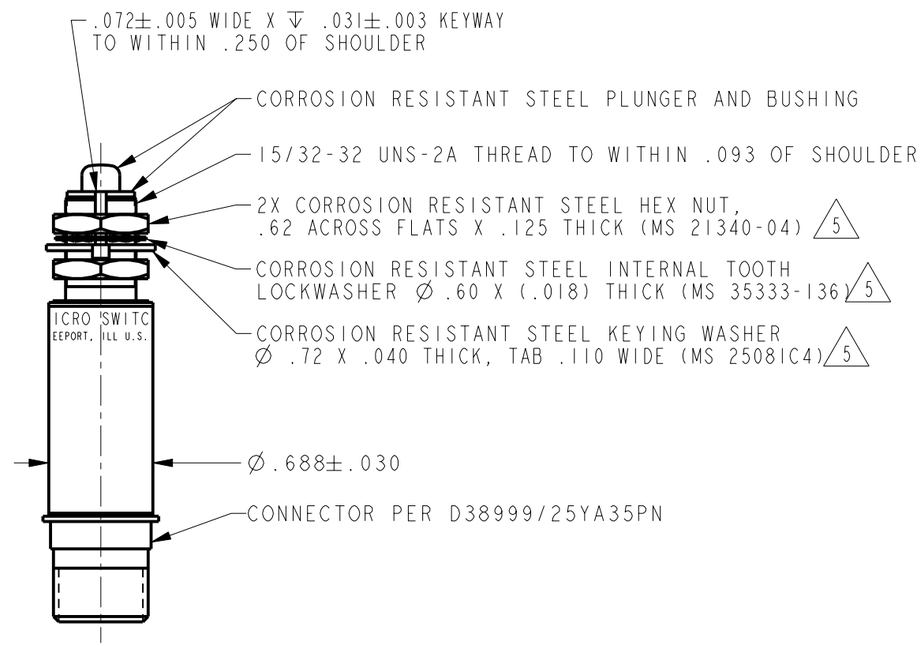

NOTES
1 - CORROSION RESISTANT STEEL ENCLOSURE
2 - SWITCH SEALED PER MIL-PRF-8805 SYMBOL 4
3 - COINCIDENCE OF OPERATING AND RELEASING POINTS: .010 INCH OF PLUNGER TRAVEL
4 - PERMANENTLY MARKED WITH CIRCUIT DIAGRAM, CATALOG LISTING, CUSTOMER PART NUMBER, FED. MFG. CODE AND DATE CODE
5 HARDWARE MAY BE PACKAGED UNASSEMBLED PER MIL-PRF-8805

THIS DRAWING COVERS A PROPRIETARY ITEM AND IS THE PROPERTY OF MICRO SWITCH. A DIVISION OF HONEYWELL. THIS DRAWING IS NOT TO BE COPIED OR USED WITHOUT THE APPROVAL OF MICRO SWITCH

THIRD ANGLE PROJECTION

SCALE FULL

DO NOT SCALE PRINT

UNLESS OTHERWISE SPECIFIED TOLERANCES ARE

ONE PLACE	(.0)	±.030
TWO PLACE	(.00)	±.015
THREE PLACE	(.000)	±.005
ANGLES		±

WEIGHT 6.2 OZ MAX

ANSI Y14.5M-1982 APPLIES

CHARACTERISTICS

OPERATING FORCE	6 -12 LB
DIFFERENTIAL FORCE	30 LB MAX
RELEASE FORCE	4 LB MIN
PRETRAVEL	.040 MAX
DIFFERENTIAL TRAVEL	.020 MAX
OVERTRAVEL	.125 MIN
FREE POSITION	

ELECTRICAL DATA

CONTACT ARRANGEMENT
2X S P D T

LOAD	28 VDC	
	SEA LEVEL	50,000 FT.
RES	4	4
IND	2	2
MOTOR	4	
LAMP		

CATALOG LISTING 602EN27-RB
ISSUE 3
PAGE 1 OF 1
RELEASE NO. PR-24360
REPLACES -

DRAWN	GRT	3 DEC 99
CHECK		
CHECK		3 DEC 99
CHECK	SAV	3 DEC 99
PTC/CAD 2D		

REVISIONS

A	PR-24360	GRT 3 DEC 99
B	205329	CSL 8 APR 02