CAPACITOR MOUNTS

Material Specifications:
Natural or black Nylon, per ASTM D 4066
PA111, UL Rated 94V-2

Oxygen Rating Index: Over 28%

Standard Drawing Tolerances:
(unless otherwise indicated)
Fractions: ± 1/64 (0.4) .XX = ±0.01 (0.25)
.X = ±0.10 (2.5) .XXX = ±0.005 (0.13)

300 Series

Color: Natural

Part No.	A55485/ M38527/06	A	B	C	D	E	F	Price Code
300-100-022	-	.100 (2.5)	N.A.	.022 (.55)	N.A.	.180 (4.6)	.090 (2.3)	A
300-100-03	-	.100 (2.5)	.030 (.76)	.011 (.28)	.050 (1.3)	.180 (4.6)	.090 (2.3)	A
300-100	-008N	.100 (2.5)	.045 (1.1)	.022 (.55)	.050 (1.3)	.180 (4.6)	.090 (2.3)	A
300-100-075	-	.100 (2.5)	.075 (1.9)	.022 (.55)	.055 (1.4)	.180 (4.6)	.090 (2.3)	A
301-150CS	-	.150 (3.8)	N.A.	.022 (.55)	N.A.	.270 (6.9)	.125 (3.2)	A
301-150-030	-	.150 (3.8)	.030 (.76)	.011 (.28)	.090 (2.3)	.270 (6.9)	.125 (3.2)	A
301-150-040	-	.150 (3.8)	.040 (1.0)	.022 (.55)	.090 (2.3)	.270 (6.9)	.125 (3.2)	A
301-150	-009N	.150 (3.8)	.045 (1.1)	.022 (.55)	.090 (2.3)	.270 (6.9)	.125 (3.2)	A
301-150 MOD	-	.150 (3.8)	.045 (1.1)	.022 (.55)	.090 (2.3)	.240 (6.1)	.090 (2.3)	A
302-200-030	-	.200 (5.1)	.030 (.76)	.011 (.28)	.090 (2.3)	.290 (7.4)	.090 (2.3)	A
302-200-040	-	.200 (5.1)	.040 (1.0)	.022 (.55)	.090 (2.3)	.290 (7.4)	.090 (2.3)	A
302-200	-010N	.200 (5.1)	.045 (1.1)	.022 (.55)	.090 (2.3)	.290 (7.4)	.090 (2.3)	A
303-250	-017N	.250 (6.4)	.045 (1.1)	.026 (.66)	.090 (2.3)	.340 (8.6)	.090 (2.3)	A
304-300	-018N	.300 (7.5)	.045 (1.1)	.026 (.66)	.140 (3.6)	.390 (9.9)	.090 (2.3)	B
305-350	-019N	.350 (8.9)	.045 (1.1)	.030 (.76)	.140 (3.6)	.440 (11.2)	.090 (2.3)	B
306-400	-020N	.400 (10.2)	.045 (1.1)	.030 (.76)	.190 (4.8)	.490 (12.4)	.090 (2.3)	B
307-500	-021N	.500 (12.7)	.045 (1.1)	.030 (.76)	.190 (4.8)	.590 (12.4)	.090 (2.3)	B

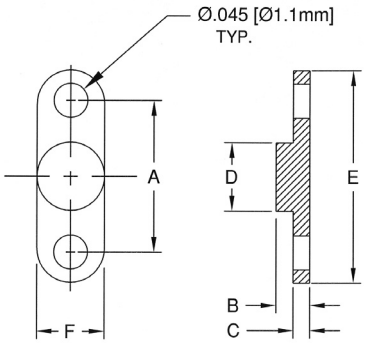

cage code (FSCM) **32559** © copyright 2004 Bivar Inc.