unimec 1S

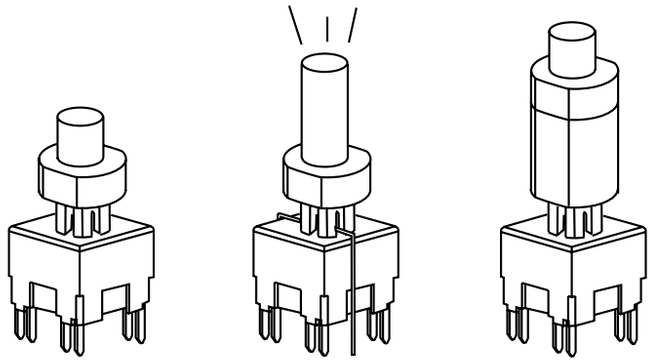

Technical Data:

- Max. 250mA/120V/9W AC/6W DC
- 2 pole
- momentary or alternate
- 8 contact functions
- temperature range:
  low temp: -40/+75°C
  high temp: -40/+160°C
- through-hole only

Dimensions

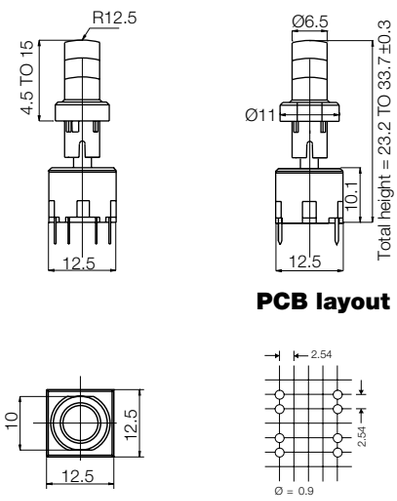

PCB layout

Dimensions w/LED

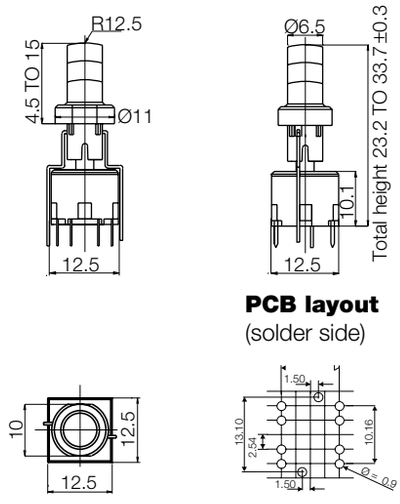

PCB layout
(solder side)

Dimensions extended height

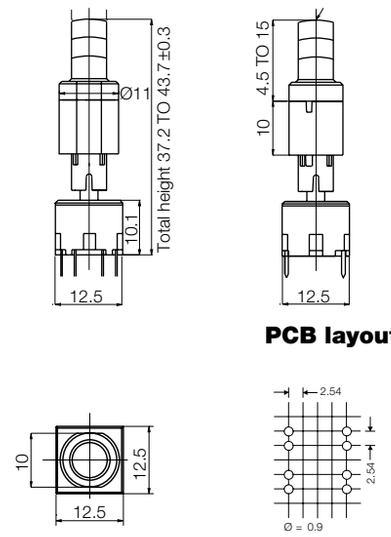

PCB layout

HOW TO ORDER

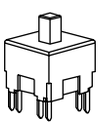

1	5				+	1	6	2	5	0	+	1	S	0	9	-			.			+	2	S	0	9	-			.	0

Switch
15501 mom. silver
15551 alt. silver
15502 mom. gold
15552 alt. gold
15500 silent silver
15401 mom. silver high temp.
15451 alt. silver high temp.

Extender

Cap black

H
16.0
19.0
22.5

Total height = 1S09-H + 11.2 mm

1S09-H	Total height
1S09-16.0	27.2
1S09-19.0	30.2
1S09-22.5	33.7

Extender black
(Optional)
Adds 5-10mm to total height
(Stackable)

H
05.0 - 06.0
07.0 - 08.0
09.0 - 10.0

1	5				+	1	6	2	5	0	+	1	S	1	1	-			.			+	1	6	9	2	3		

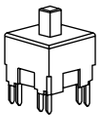

Cap Transparent

H
16.0
19.0
22.5

LED

00 blue
20 green
40 yellow
80 red
2040 green/yellow
8020 red/green
8040 red/yellow

Custom heights:
15XXX + 1S + 2S is available in any height from 23.2 to 43.7 mm
Min. order qty. for custom heights is 2.000 pcs. + a start-up charge

Ordering example: 15501 + 16250 + 1S11-16.0 + 1692380

mec a/s Jan. 2002

mec· Industriparken 23 · P.o. Box 26 · DK-2750 Ballerup · Denmark
Tel.: +45 44 97 33 66 · Fax: +45 44 68 15 14 · E-mail: danmec@mec.dk · www.mec.dk