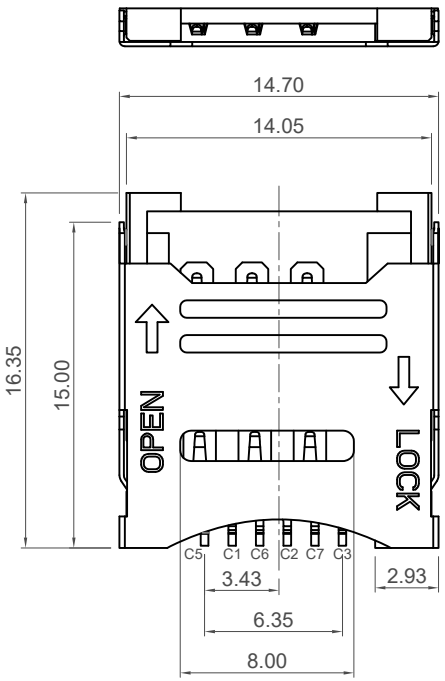

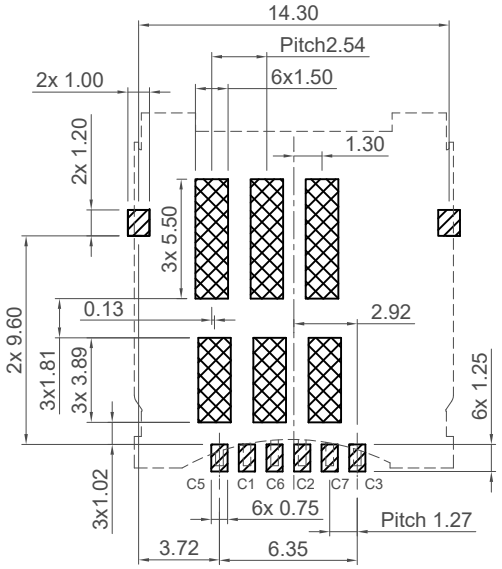

Recommended PCB Layout
(Viewed from Component Side - Tolerance:±0.05mm)
Solder Area Keep Out Area Component Outline

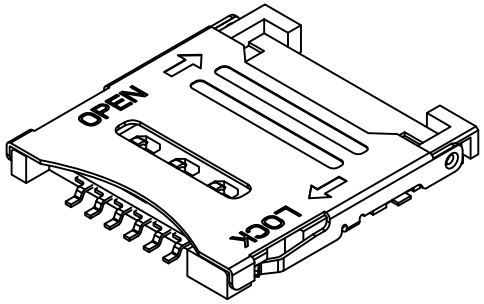

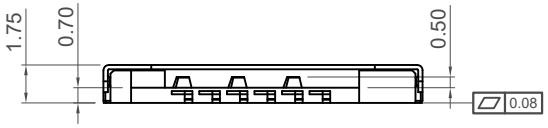

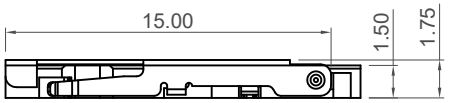

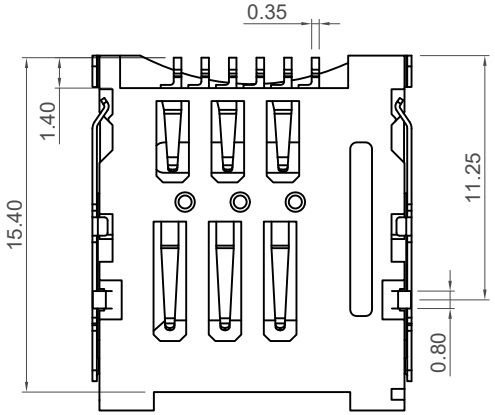

Ordering Grid

SIM7200 – 6 – 0 – 18 – 00 – A

Request Samples and Quotation

No. of Contacts
6

Switch
0 = Without

Profile Height
18 = 1.75mm

Packing Options
A = Tape & Reel
(1,300 per reel)

Locating Peg
00 = Without

Specifications 规格

Material 物料
- Plastic Housing 塑胶外壳: LCP, UL94V-0, Black
- Contact Terminal 接触端子: Phosphor Bronze
- Metallic Shell 金属外壳: Stainless Steel

Plating 电镀
- Contact Terminal plating 接触端子部分电镀:
  - Under-plating 底层电镀: 30μ" min. Nickel
  - Contact Area 接触部分: 1μ" min. Gold
  - Soldering Area 焊接部分: 50μ" min. Tin
- Metallic Shell plating 金属外壳电镀:
  - Under-plating 底层电镀: 30μ" Nickel
  - Soldering Area 焊接部分: 30μ" Nickel

Electrical 电气
- Voltage rating 电压额定值: 30V max.
- Current Rating 电流额定值: 1.0 Amp max.
- Contact Resistance 接触电阻值: 100 mΩ max.
- Insulation Resistance 绝缘电阻值: 1000 MΩ min.
- Dielectric Withstand Voltage 耐电压: 500 V AC

Mechanical & Environmental 机械 & 环境
- Operating Temperature 工作温度: -40°C to +85°C
- Durabillity 耐久性: 5,000 cycles

Part Number	Product Description
SIM7200	Micro SIM Card Connector Hinged Type, 6 Pin, SMT, 1.75mm Profile
Drawing Date 8th September 2016	

By	CC	Tolerances (Except as Noted) Length	Angle	Units: Metric (mm)
Detail	Drawing Release	X. ± 0.25 X.X ± 0.20 X.XX ± 0.15	± 3°	3rd Angle Projection
Revision	A1			
Date	14/11/16			

RoHS COMPLIANT 2011/65/EU Deca-BDE

© This drawing is confidential and copyright of Global Connector Technology, Ltd (GCT). This drawing must not be copied or disclosed without written consent. E & OE

GCT
www.gct.co

Not to Scale	Drawn By AJO	Sheet No. 1/4

1 Slide metal lid from 'LOCK' position to 'OPEN' position

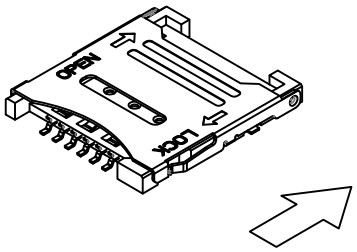

2 Open metal lid to allow Micro SIM card to be inserted

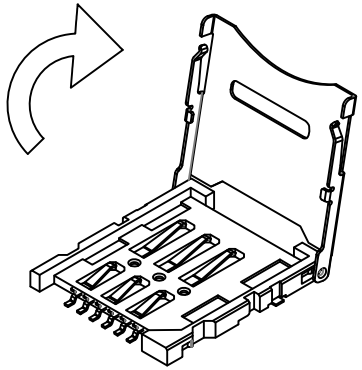

3 Place Micro SIM card against contacts, chip face down

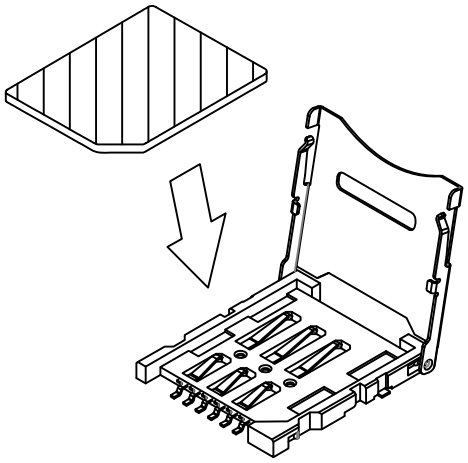

4 Close metal lid and slide back to 'LOCK' position

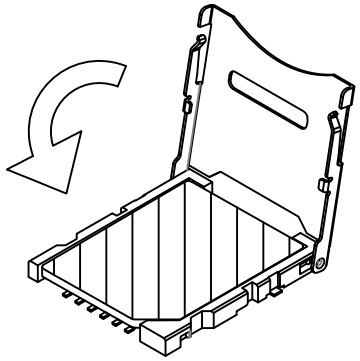

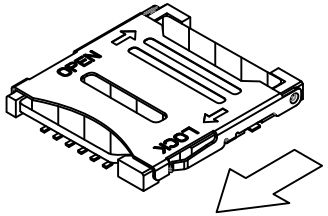

Part Number	Product Description						
SIM7200	Micro SIM Card Connector Hinged Type, 6 Pin, SMT, 1.75mm Profile						
Drawing Date							
8th September 2016							
By	CC	Tolerances (Except as Noted) Length	Angle	Units: Metric (mm)	RoHS COMPLIANT 2011/65/EU Deca-BDE ✓	© This drawing is confidential and copyright of Global Connector Technology, Ltd (GCT). This drawing must not be copied or disclosed without written consent. E & OE	GCT www.gct.co
Detail	Drawing Release	X. ± 0.25 X.X ± 0.20 X.XX ± 0.15	± 3°	3rd Angle Projection			Not to Scale / Drawn By AJO / Sheet No. 2/4
Revision	A1						
Date	14/11/16						

Micro SIM Reference

thickness = 0.76±0.08

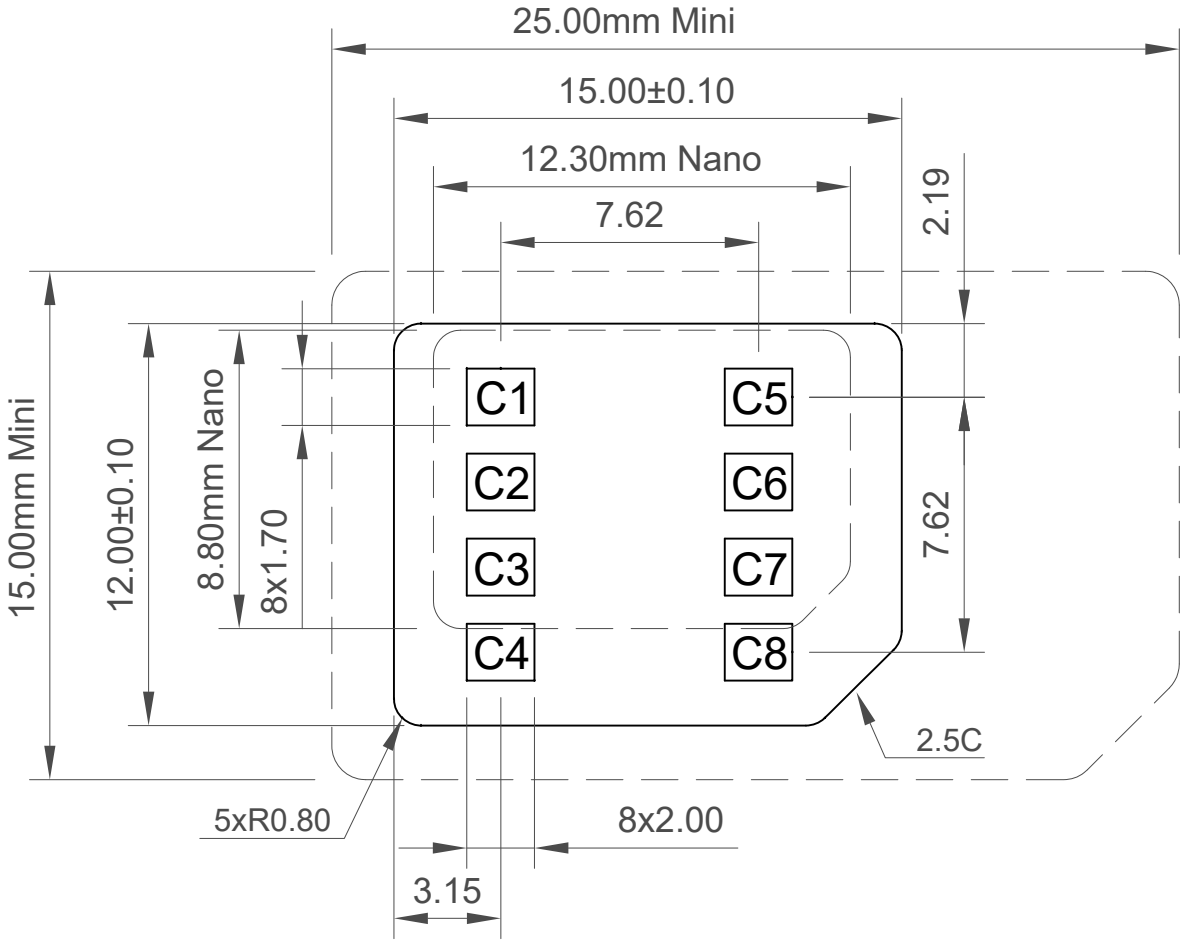

Contact Key	
C1	VCC
C2	RST
C3	CLK
C4	RFU
C5	GND
C6	Vpp
C7	I/O
C8	RFU

Part Number	Product Description
SIM7200	Micro SIM Card Connector Hinged Type, 6 Pin, SMT, 1.75mm Profile
Drawing Date 8th September 2016	

By	CC	Tolerances (Except as Noted) Length	Angle	Units: Metric (mm)	RoHS COMPLIANT 2011/65/EU Deca-BDE	© This drawing is confidential and copyright of Global Connector Technology, Ltd (GCT). This drawing must not be copied or disclosed without written consent. E & OE	GCT www.gct.co
Detail	Drawing Release	X. ± 0.25 X.X ± 0.20 X.XX ± 0.15	± 3°	3rd Angle Projection			Not to Scale / Drawn By AJO / Sheet No. 3/4
Revision	A1						
Date	14/11/16						

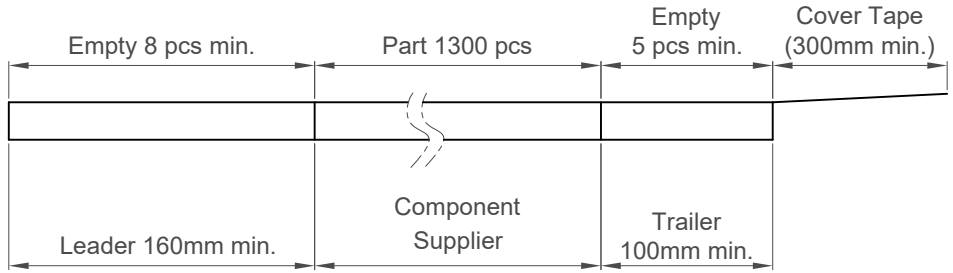

Part No.	Pcs/Reel	Reels/Carton	Pcs/Carton
SIM7200	1300	5	6500

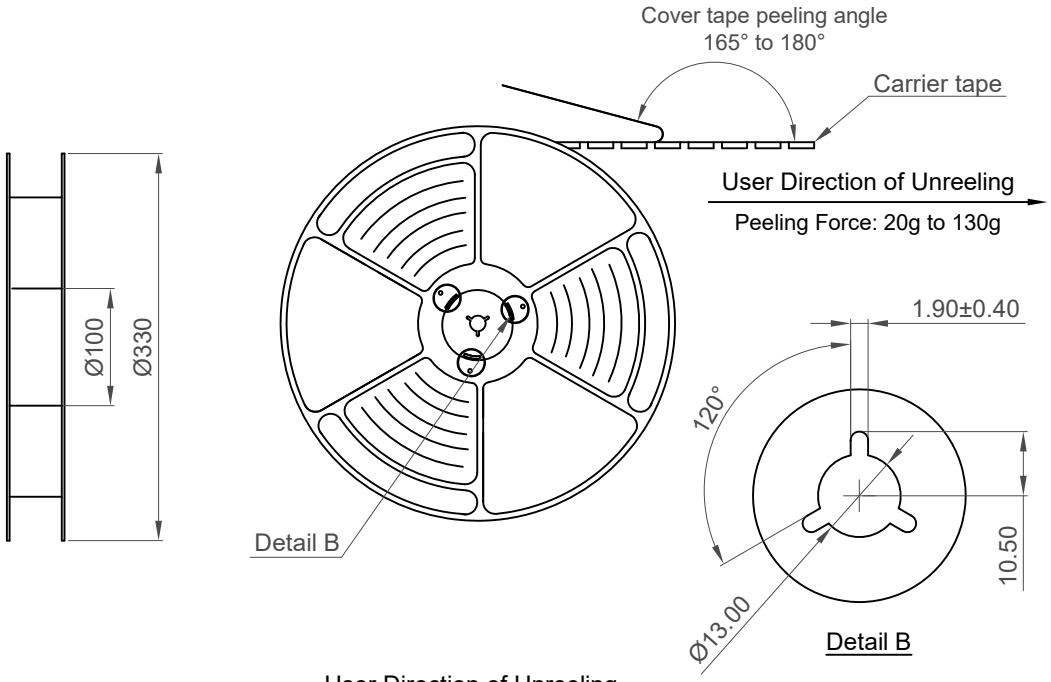

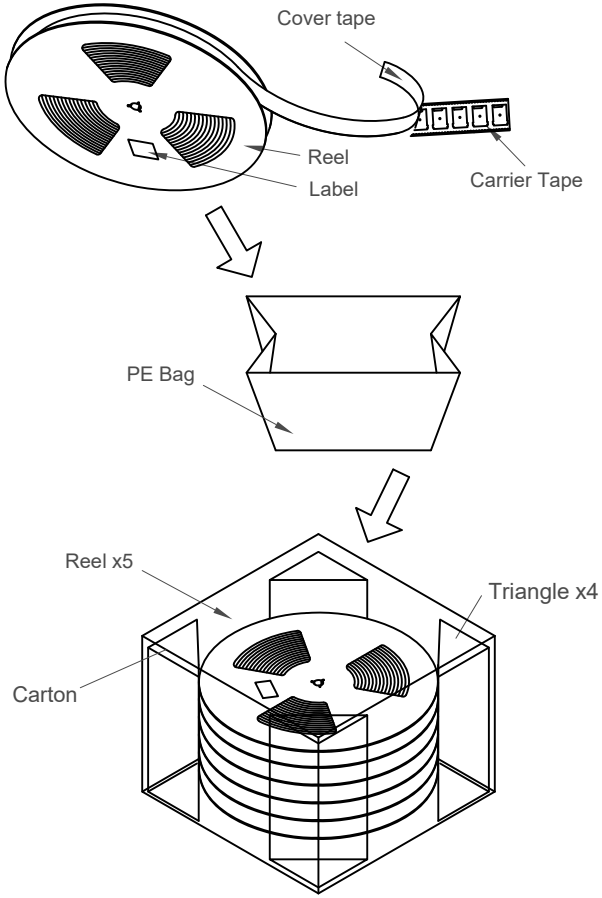

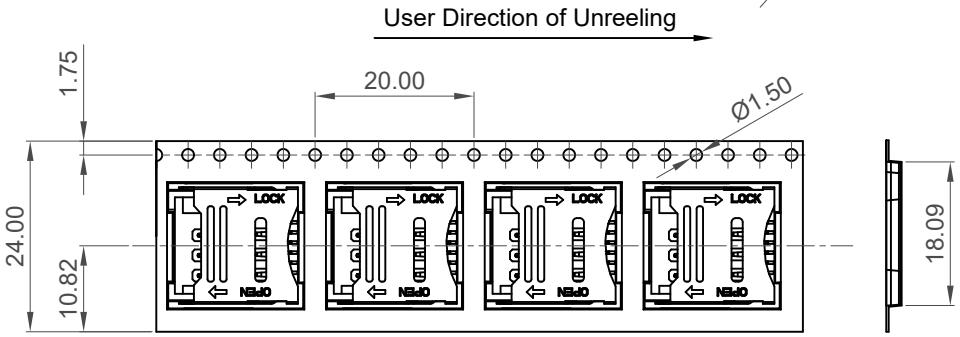

Part Number	Product Description
SIM7200	Micro SIM Card Connector Hinged Type, 6 Pin, SMT, 1.75mm Profile
Drawing Date	
8th September 2016	

By	CC	Tolerances (Except as Noted) Length	Angle	Units: Metric (mm)
Detail	Drawing Release	X. ± 0.30 X.X ± 0.25 X.XX ± 0.15	X. ± 5° X.X ± 2° X.XX ± 1°	3rd Angle Projection
Revision	A1			
Date	14/11/16			

RoHS COMPLIANT 2011/65/EU Decs-BDE

© This drawing is confidential and copyright of Global Connector Technology, Ltd (GCT). This drawing must not be copied or disclosed without written consent. E & OE

GCT
www.gct.co

Not to Scale	Drawn By AJO	Sheet No. 4/4

Mouser Electronics

Authorized Distributor

Click to View Pricing, Inventory, Delivery & Lifecycle Information:

Global Connector Technology (GCT):

SIM7200-6-0-18-00-A