GOLDFISH

Power Connectors

Positronic®

THE SCIENCE OF CERTAINTY

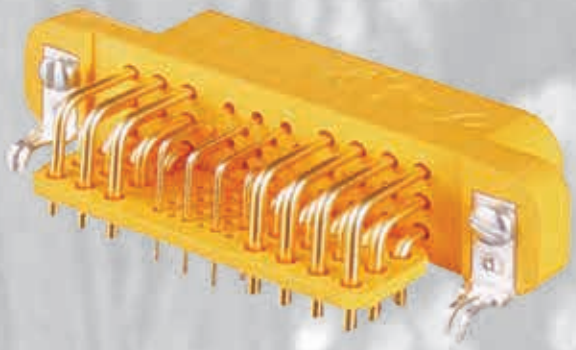

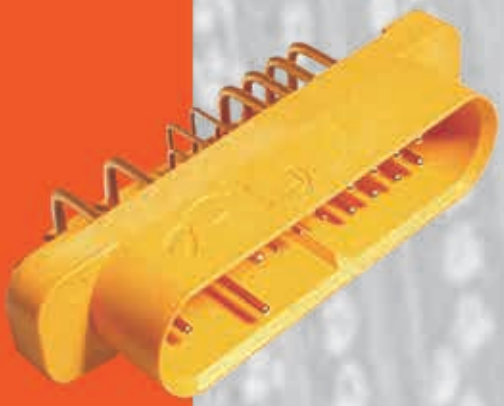

A-001 Rev D

Goldfish Power Connectors

Typical Examples of Goldfish Power Connectors

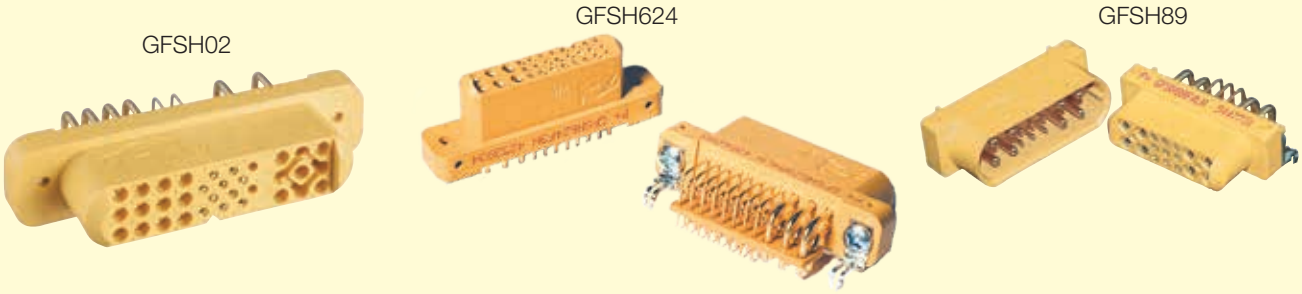

Right Angle (90˚) to Straight PCB Mount

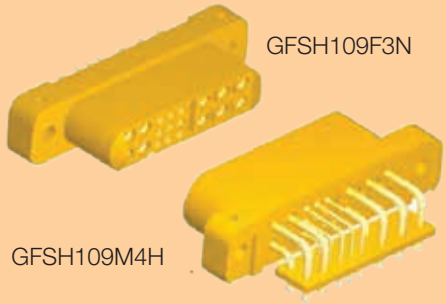

Panel Mount to Panel Mount

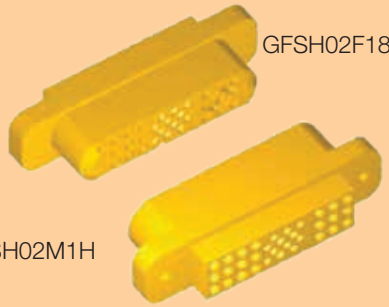

Goldfish Power Connector Features !!!

- **Excellent Power Density**
- **Blind mate - Float mounting**
- **20, 30, 35 and 50 ampere power contacts**
- **Hot Plug Capability**
- **AC, DC and Signal solid machined contacts in one connector**
- **Safety Agency Recognition**

Unless otherwise specified, dimensional tolerances are:
1) ±0.03 [0.001] for male contact mating diameters.
2) ±0.08 [0.003] for contact termination diameters
3) ±0.13 [0.005] for all diameters
4) ±0.38 [0.015] for all other dimensions

All dimensions are in millimeters [inches]

Connector Versions and Technical Characteristics

Connector Versions (face view of male)

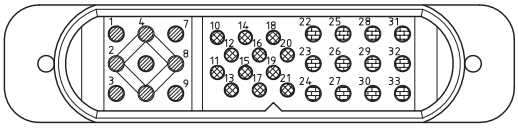

GFSH02: Fully populated
Twenty-one (21) Size 16 power contacts
Twelve (12) Size 20 signal contacts

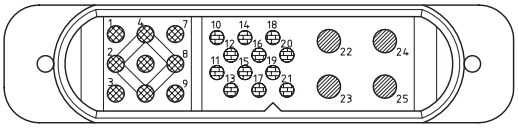

GFSH435: Fully populated
Four (4) size 12 power contacts
Nine (9) size 16 power contacts
Twelve (12) size 20 signal contacts

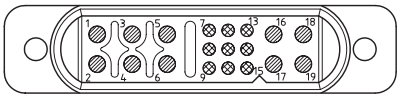

GFSH109: Fully populated
Ten (10) Size 16 power contacts
Nine (9) Size 22 signal contacts

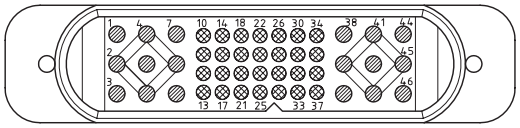

GFSH928: Fully populated
Eighteen (18) Size 16 power contacts
Twenty-eight (28) Size 22 signal contacts

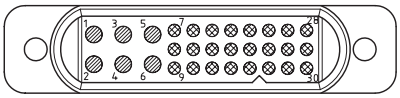

GFSH624: Fully populated
Six (6) size 16 power contacts.
Twenty four (24) size 22 signal contacts.

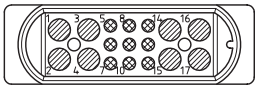

GFSH89: Fully populated
Eight (8) Size 16 power contacts
Nine (9) Size 22 signal contacts

Technical Characteristics

Materials and Finishes:

Insulator: Glass-filled nylon, UL 94V-0. Color: Orange.

Contacts: Precision machined copper alloy with gold over nickel plate. Other finishes available upon request. Precision formed copper alloy with selective gold over nickel plate at mating end, and tin over nickel plate at termination end

Electrical Characteristics:

Contact Current Ratings (per UL 1977):

Size 12 Contacts: 35 amperes, continuous (standard material).
50 amperes, continuous (high conductivity material).

Size 16 Contacts: 20 amperes, continuous (standard material).
30 amperes, continuous (high conductivity material).

Size 20 Contacts: 5 amperes, nominal (standard material).

Size 22 Contacts: 3 amperes, nominal (standard material).
1 amperes, nominal (precision-formed).

Initial Contact Resistance (max.) per IEC 60512-2, Test 2b:

Size 12 Contacts: 0.001 ohms (standard material).

Size 12 Contacts: 0.0004 ohms (high conductivity material).

Size 16 Contacts: 0.0016 ohms (standard material).
0.0007 ohms (high conductivity material).

Size 20/22 Contacts: 0.005 ohms (standard material).

Size 22 Contacts: 0.009 ohms (precision-formed).

Insulation Resistance (per IEC 60512-2, Test 3a): 5 G ohms min.

Proof Voltage:

Power Contacts: 1500 V r.m.s.
1300 V r.m.s. (GFSH89 and GFSH624)

Signal Contacts: 1000 V r.m.s.

Working Voltage:

Power Contacts: 500 V r.m.s.
150 V r.m.s. (GFSH89 and GFSH624)

Signal Contacts: 333 V r.m.s.

Hot Pluggable (50 couplings per UL 1977, paragraph 15):

Size 12 Contacts: 250 VAC at 25 amperes.

Size 16 Contacts: Consult Technical Sales.

Mechanical Characteristics:

Blind Mating System: Molded in guides allow for misalignment up to 2.00 mm [0.079 inch].

Polarization: Provided by insulator.

Removable Contacts: Install contact from rear of insulator; release with extraction tool from front of insulator. Female contacts feature "closed entry" 1,000 cycles design.

Fixed Contacts: Size 12 and 16 female contacts feature "closed entry" 1,000 cycles design (for both straight & right angle (90°) PCB mount). Size 22 machined and precision-formed contacts feature "open entry" 250 cycle design for both straight & right angle (90°) PCB mount.

Contact Retention in insulator (removable and fixed):

Power Contacts: 45 N [10 lbs.] min.

Signal Contacts: 27 N [6 lbs.] min.

Sequential Mating: Two and three level systems available. Consult Technical Sales for customization.

Climatic Characteristics:

Working temperature: -55° to +105°C.

Recognized:

UL: UL File E49351 is available for all GFSH versions except GFSH928 crimp version.

Contact Performance and Temperature Rise Curves

CONTACT PERFORMANCE

Contact Resistance vs Mating Cycles

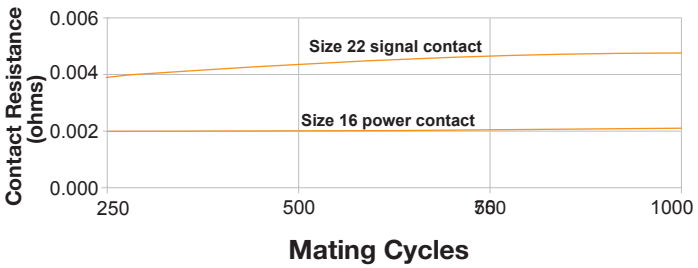

Humidity condition per EIA-364-31B, Method II (condition A) after 250, 500 and 1,000 cycles.
Contact resistance tested per IEC 60512-2, Test 2b.
Connectors tested: GFSH624.

Contact Resistance vs Mating Cycles

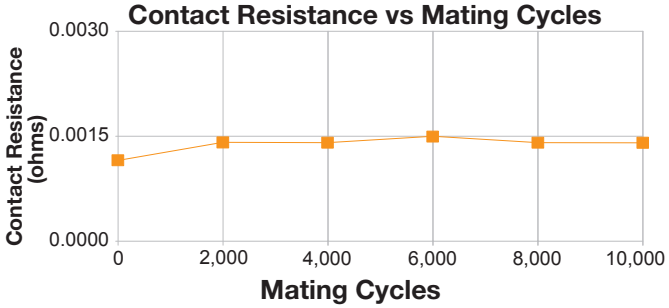

Contact resistance test under 10,000 cycles mechanical operation using GFSH89 with 12 AWG wires and size 16 contacts under load (not utilizing signal contacts).
Tested per IEC 60512-2, Test 2b. Connectors tested: GFSH89.

Note: This information is supplied for reference. Contact wear and change in contact resistance may vary from one application to another. Contact technical sales to discuss details.

TEMPERATURE RISE (ºC) CURVES

Goldfish Versions 02, 435 and 928

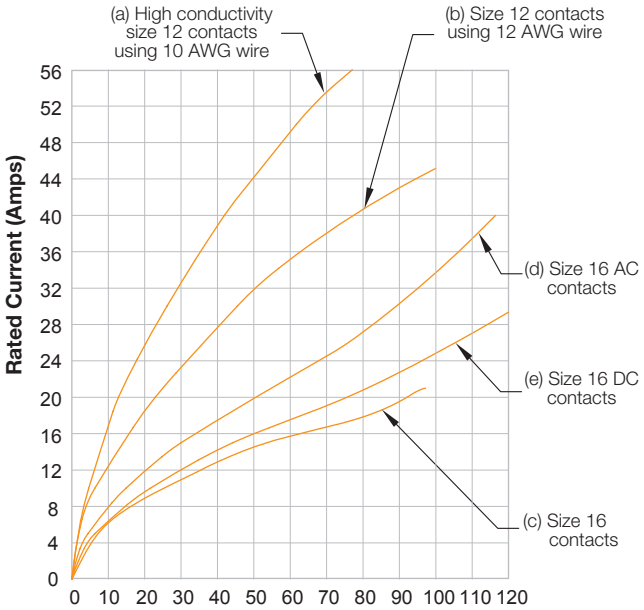

1) Connectors tested: GFSH435.
Temperature curve developed using wires of 10 AWG and 12 AWG.
For curve (a) and (b).
All size 12 contacts under load.

2) Connectors tested: GFSH928.
Temperature curve developed using wire of 12 AWG.
For curve (c).
All size 16 contacts under load.

3) Connectors tested: GFSH02.
Temperature curve developed using wire of 12 AWG.
For curve (d) and (e).
All size 16 contacts under load.

Goldfish Versions 109, 624 and 89

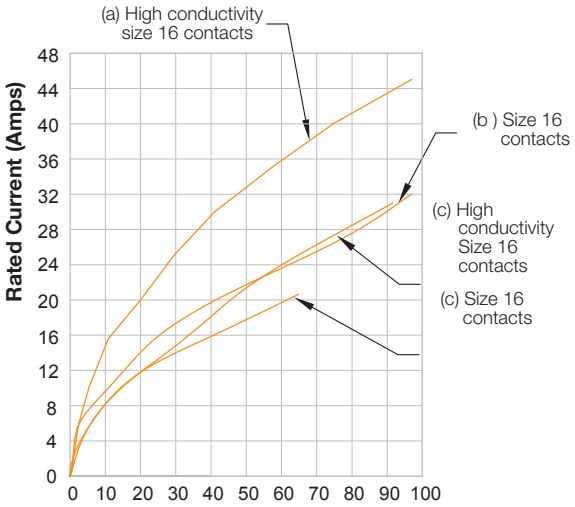

1) Connectors tested: GFSH89.
Temperature curve developed using wires of 12 AWG.
For curve (a) and (b).
All size 16 contacts under load.

2) Connectors tested: GFSH624.
Temperature curve developed using wires of 14 AWG.
For curve (c).
All size 16 contacts under load.

3) Connectors tested: GFSH109.
Temperature curve developed using wires of 12 AWG.
For curve (d).
All size 16 contacts under load.

Tested per IEC Publication 60512-3, Test 5a.

Note: These information supplied for reference only. Contact wear and change in contact resistance may vary from one application to another. Contact technical sales to discuss details.

GOLDFISH • SERIES

Straight and Right Angle (90°) PCB Mount Connectors for Versions 02, 435 and 928

OUTLINE DIMENSIONS FOR 02, 435 AND 928

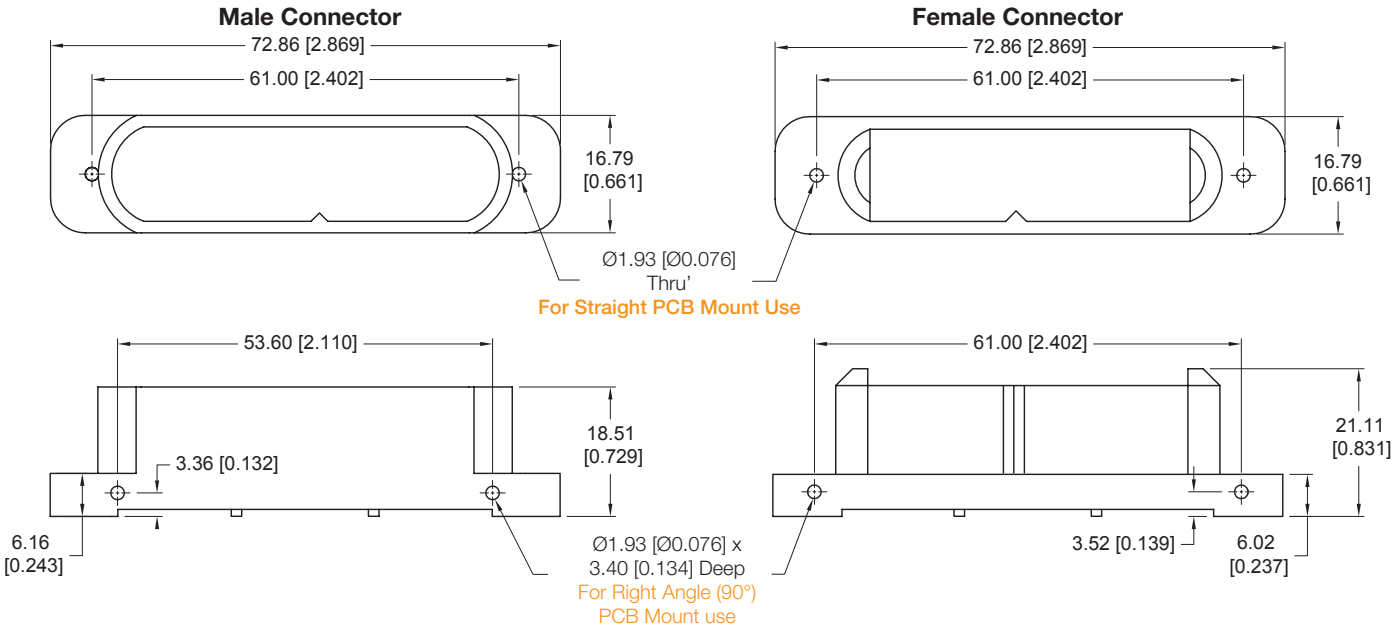

CONTACT TERMINATION DIMENSIONS FOR 02, 435 AND 928

Code 3, 38, 4 or 48 in Step 4

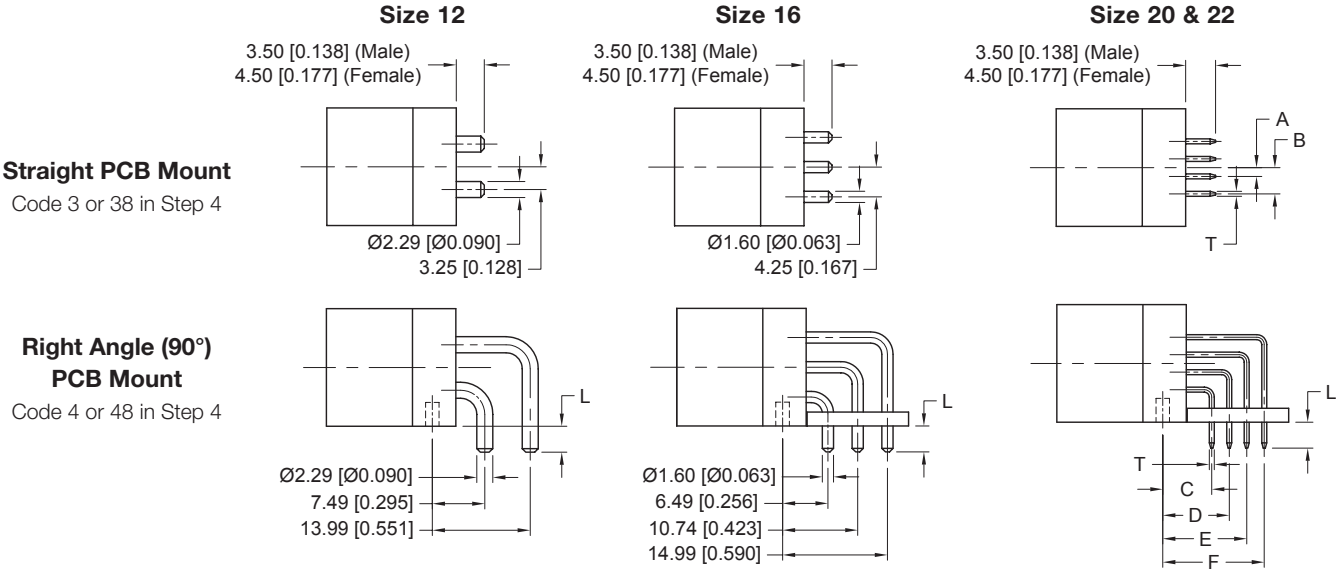

DIM		GOLDFISH 02 / 435	GOLDFISH 928
A		1.25 [0.049]	1.35 [0.053]
B		3.75 [0.148]	4.05 [0.159]
C		6.99 [0.275]	6.49 [0.256]
D		9.49 [0.374]	9.32 [0.367]
E		11.99 [0.472]	12.16 [0.479]
F		14.49 [0.570]	14.99 [0.590]
T		Ø0.71 [Ø0.028]	
L	Male	3.70 [0.146]	
	Female	4.50 [0.177]	

Connector shown is male. Unless otherwise specified, above dimensions are identical to female connector.

GOLDFISH • SERIES

Straight and Right Angle (90°) PCB Mount Connectors for Versions 109 and 624

OUTLINE DIMENSIONS FOR VERSIONS 109 AND 624

Male Connector

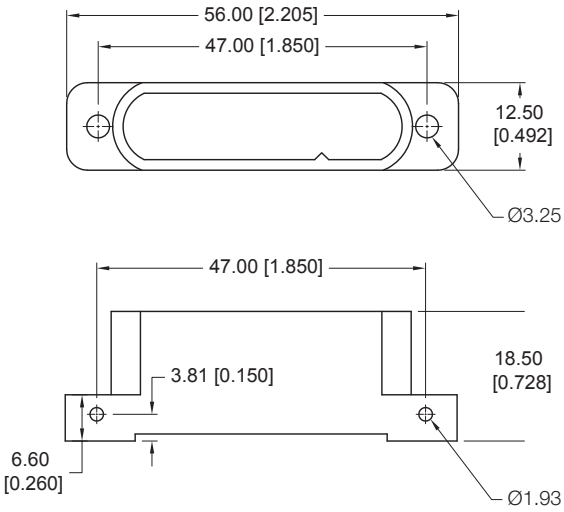

Female Connector

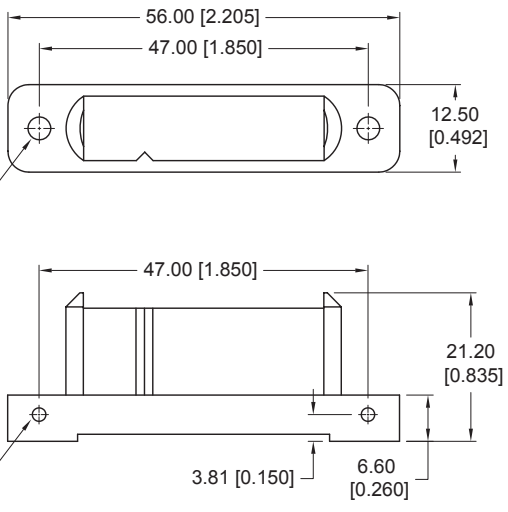

CONTACT TERMINATION DIMENSIONS FOR VERSIONS 109 AND 624

Code 3, 37, 4 or 47 in Step 4

Size 16 | **Size 22**

Straight PCB Mount
Code 3 or 37 in Step 4

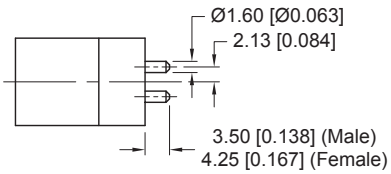

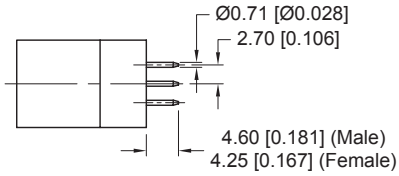

Right Angle (90°) PCB Mount
Code 4 or 47 in Step 4

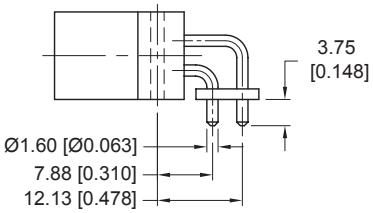

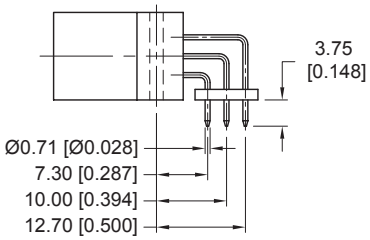

Connector shown is male. Unless otherwise specified, above dimensions are identical to female connector.

Panel Mount Connectors with Removable Contacts for Versions 02, 435, 928, 109 and 624

OUTLINE DIMENSIONS FOR VERSIONS 02, 435 AND 928

Code 1 in Step 4

Male Connector

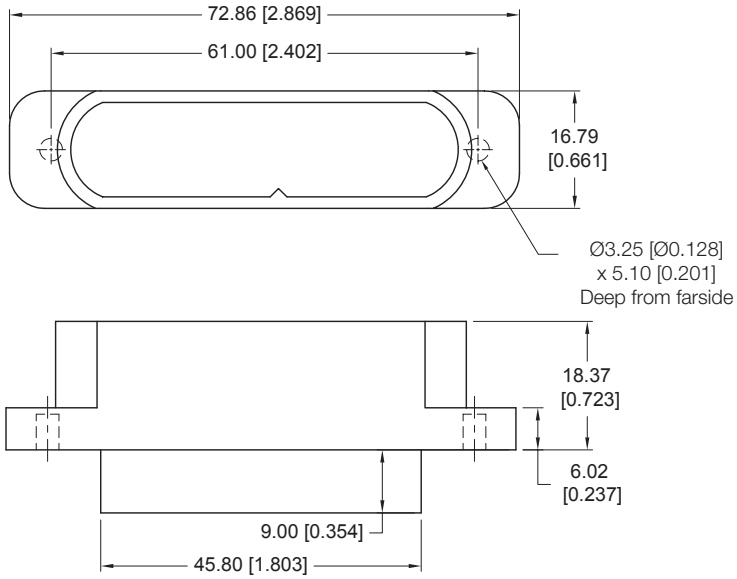

Female Connector

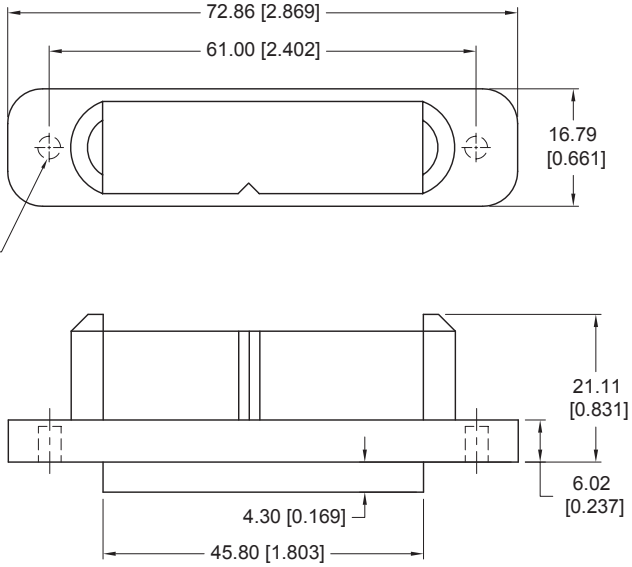

OUTLINE DIMENSIONS FOR VERSIONS 109 AND 624

Code 1 in Step 4

Male Connector

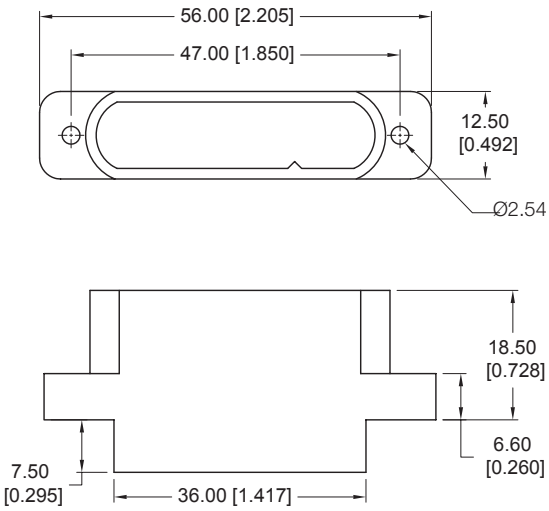

Female Connector

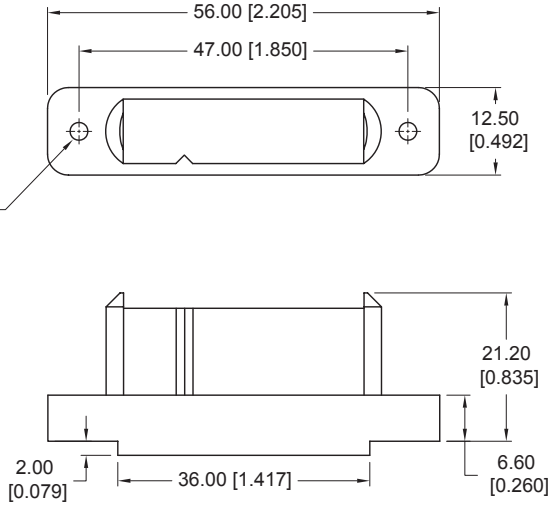

Removable contacts should be allowed to float after installing in connector body for optimum mating.
Consult Technical Sales if alignment insert for male contacts is desired.
Alignment insert for GFSH89, GFSH109 and GFSH928 are available. Consult Technical Sales for other versions.

Straight and Right Angle (90°) PCB Mount Connectors and Panel Mount for Version 89

OUTLINE DIMENSIONS FOR VERSION 89 STRAIGHT AND RIGHT ANGLE (90°) PCB MOUNT CONNECTOR

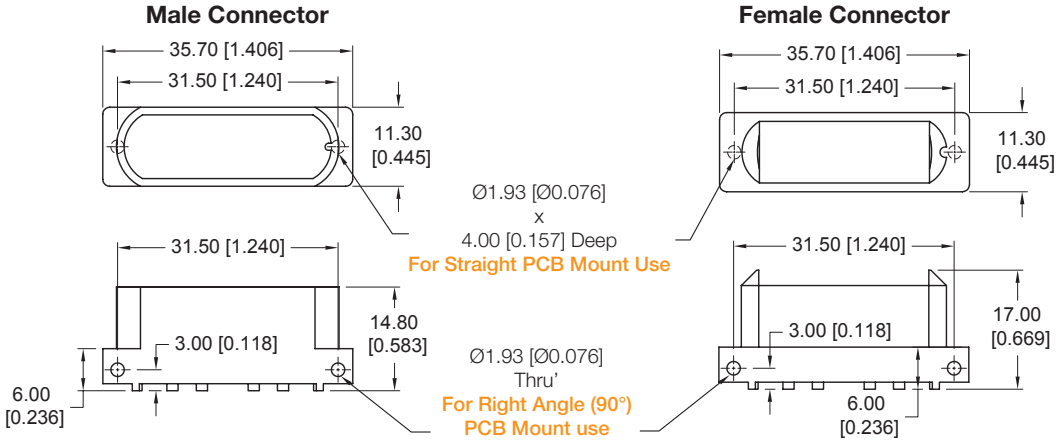

CONTACT TERMINATION DIMENSIONS FOR VERSION 89

Code 3, 37, 4 or 47 in Step 4

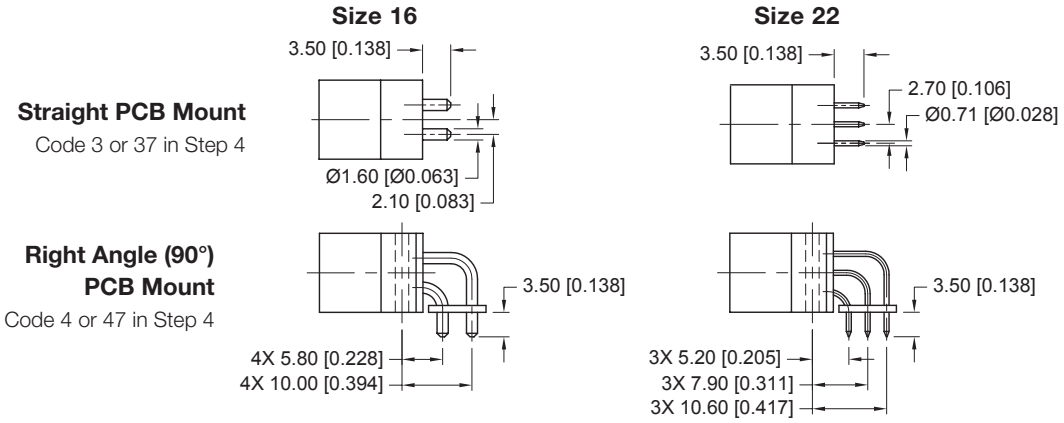

OUTLINE DIMENSIONS FOR VERSION 89 PANEL MOUNT CONNECTORS

Code 1 in Step 4

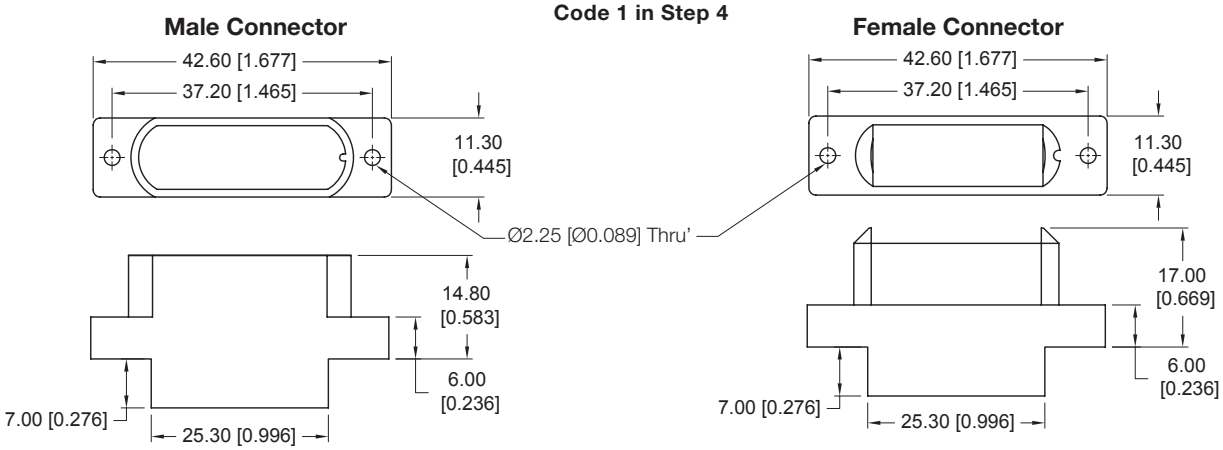

Removable contacts should be allowed to float after installing in connector body for optimum mating.
Contact Technical Sales for additional polarization features for panel mounting.

Panel Cutout Dimensions For Panel Mount Connectors

PANEL CUTOUT DIMENSIONS FOR FLOAT BUSHING

Goldfish 02, 435 and 928

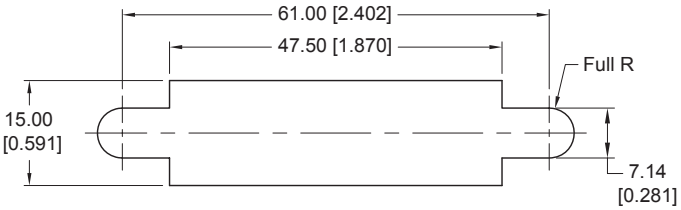

Goldfish 109 and 624

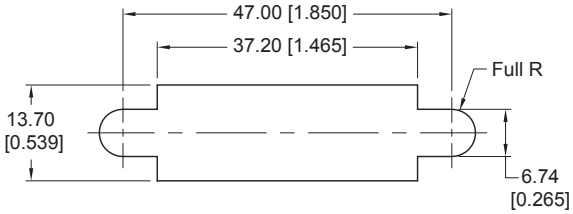

Goldfish 89

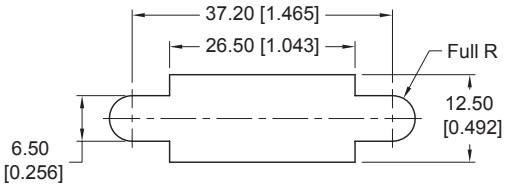

PANEL CUTOUT DIMENSIONS FOR MOUNTING SCREWS AND JACKSCREWS

MOUNTING SCREWS

Goldfish 02, 435 and 928

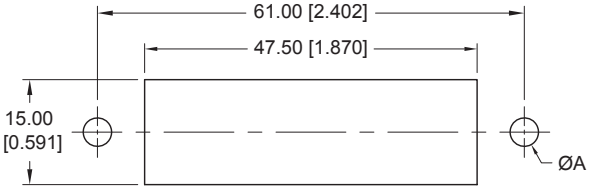

Goldfish 109 and 624

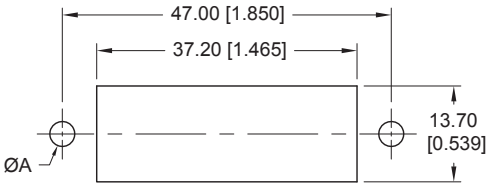

Goldfish 89

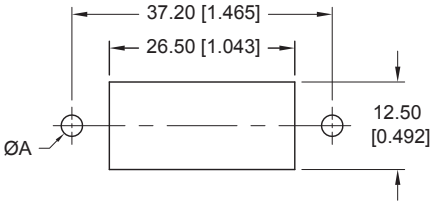

MOUNTING SCREWS	ØA ±0.08 [0.003]
02, 435 and 928	4.06 [0.160]
109 and 624	3.56 [0.140]
89	3.05 [0.120]

JACKSCREWS

Goldfish 02, 435 and 928

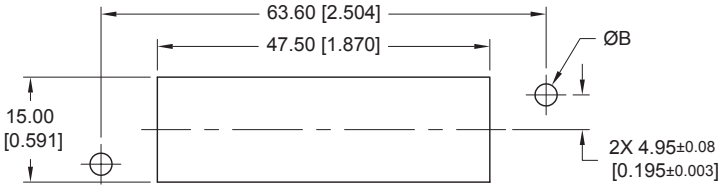

Goldfish 109 and 624

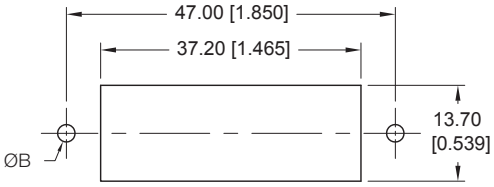

Goldfish 89

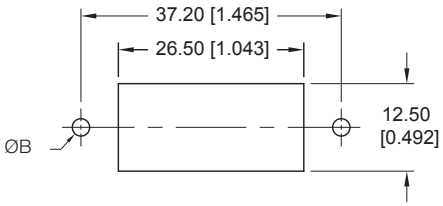

JACKSCREWS	ØB ±0.08 [0.003]
02, 435 and 928	3.15 [0.124]
109 and 624	2.49 [0.098]
89	2.49 [0.098]

GOLDFISH • SERIES

Compliant Press-Fit Terminations For Straight PCB Mount Connectors

Code 93 or 94 in Step 4

CONTACT TERMINATION DIMENSIONS

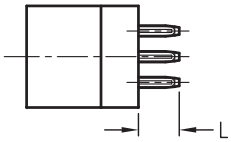

Bi-Spring Power
size 16 contacts
per IEC 60352-5

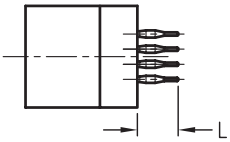

Omega Signal
size 20/ 22 contacts
Patent No. 6,260,268

Connector shown is male. Unless otherwise specified, above dimensions are identical to female connector.

Code 93 or 94 in Step 4

CODE	L	PCB THICKNESS
93	5.72 [0.225]	2.29 to 4.45 [0.090 to 0.175]
94	7.04 [0.277]	4.45 [0.175] min

Note: Outline dimensions for Press-Fit Connectors are the same as those of Straight PCB Mount Versions.
For Suggested Straight Mount PCB Holes Sizes of Compliant Press-Fit Connectors, **please refer to SK6370** or consult Technical Sales for more information.

PRESS-FIT USER INFORMATION

Connectors-to-PCB installation instructions:

1. Choose the proper tooling. Insertion tooling and single contact repair tooling are available from Positronic.
2. Insert the connector into the PCB or backplane and seat connector fully with seating / support tool.
3. Secure the connector to the PCB or backplane using two self-tapping screws for plastic.

Need to repair a single contact because of damage in manufacturing, testing, or field use?

1. Choose the proper contact extraction tool.
2. Push the contact out with a firm, steady force. Remember, excessive force is not required.
3. Install a new contact with the proper contact insertion tool. You are done.

Connector Installation Tools: Ordering Information

Connector Variant	Seating Tool Part No.	Support Tool Part No.
GFSH02M93/94H	9513-309-2-0	9513-404-1-0
GFSH02F93/94H	9513-309-3-0	
GFSH109M93/94H	9513-309-4-0	9513-404-2-0
GFSH109F93/94H	9513-309-9-0	
GFSH435M93/94H	9513-309-10-0	9513-309-11-0
GFSH435F93/94H	9513-309-5-0	
GFSH624M93/94H	9513-309-12-0	9513-309-13-0
GFSH624F93/94H	9513-309-14-0	
GFSH89M93/94H	9513-309-7-0	9513-309-8-0
GFSH89F93/94H	9513-309-6-0	
GFSH928M93/94H	9513-309-15-0	9513-309-16-0
GFSH928F93/94H	9513-309-17-0	

Mounting Screws: Ordering Information

Connector Variant	Screw Part No.
GFSH02/928*1H	A2076-12-6-97
GFSH02/928*3H	A4546-7-1-97
GFSH02/928*4H	A4546-7-0-97
GFSH02/928*93H	A4546-7-2-97
GFSH02/928*94H	A4546-7-3-97
GFSH109/624*1H	A2076-16-1-97
GFSH109/624*3H	A2076-12-6-97
GFSH109/624*4H	A4546-7-0-97
GFSH109/624*93H	A2076-12-6-97
GFSH109/624*94H	A2076-12-0-97
GFSH435*1H	A2076-12-6-97
GFSH435*3H	A4546-7-1-97
GFSH435*4H	A4546-7-0-97
GFSH435*38H	A4546-7-1-97
GFSH435*48H	A4546-7-0-97
GFSH89*1H	A4546-14-1-97
GFSH89*3H	A4546-7-1-97
GFSH89*4H	A4546-7-0-97
GFSH89*93H	A4546-7-1-97
GFSH89*94H	A4546-7-2-97

Material: Steel, zinc plate

Jackscrew Systems

JACKSCREW SYSTEMS FOR VERSION 89

Code E or T in Step 5

Version 89
Panel Mount Only

Material: E - Stainless Steel, Passivated.
T - Stainless Steel, Passivated.

Hex Nut and Lockwashers
- Stainless Steel, Passivated.
Knob - Aluminium, Yellow Anodized.

Code E

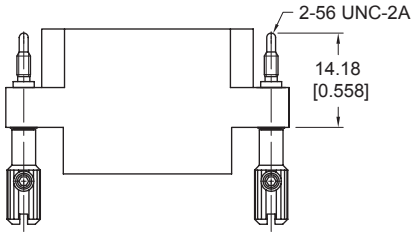

Code T

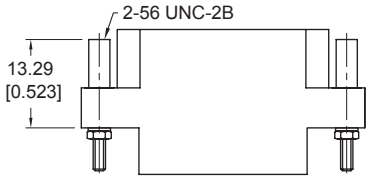

JACKSCREW SYSTEMS FOR VERSION 109 AND 624

Code E or T in Step 5

Version 109 and 624
Panel Mount

Material: E - Stainless steel, passivated.
T - Stainless steel, passivated.
Hex Nut and Lockwashers
- Stainless steel, passivated.
Knob - Aluminium, yellow anodized.

Code E

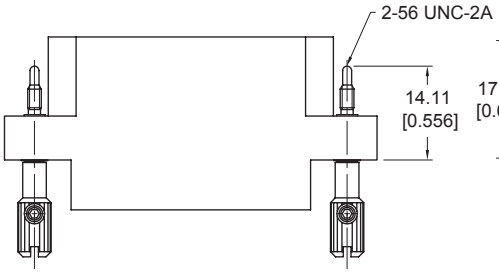

Code T

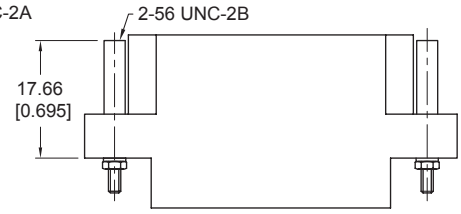

Version 109 and 624
Straight or Right Angle (90°)

Material: T - Stainless steel, passivated.
Hex Nut and Lockwashers
- Stainless steel, passivated.
For PCB version, only T is available.

Code T

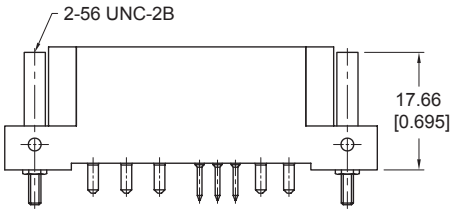

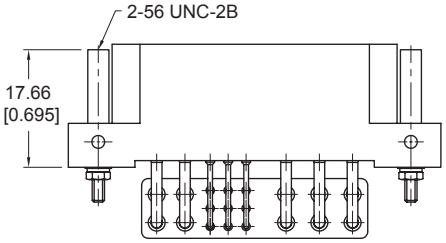

Note: For GFSH624, only PCB male fixed jackscrew and Panel female rotating jackscrew is available.

JACKSCREW SYSTEMS FOR VERSION 02, 435 AND 928

Code E or T in Step 5

Version 02, 435 and 928
Panel Mount

Material:
E - Steel, zinc plate with dichromate seal or chromate seal.
Knob - Aluminium, yellow anodized.

Material:
T - Steel, zinc plate with dichromate seal or chromate seal.
Hex Nut - Brass, zinc plate with dichromate seal or chromate seal
Lockwashers - Phosphor bronze, zinc plate with dichromate seal or chromate seal

Consult Technical Sales for GFSH02, 435 and 928 PCB version of code T for availability.

Code E

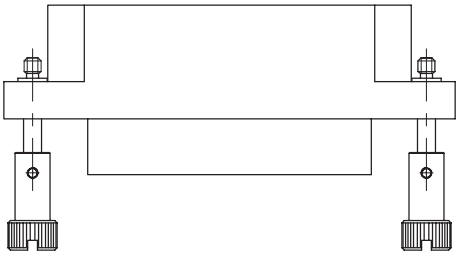

Code T

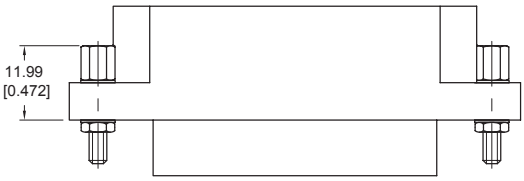

Connector shown is male. Unless otherwise specified, above dimensions are identical to female connector.

Modular Cable Clamp Hoods for Versions 02, 435 and 928

MODULAR CABLE CLAMP HOODS FOR VERSIONS 02, 435 AND 928

Code W or WE in Step 5

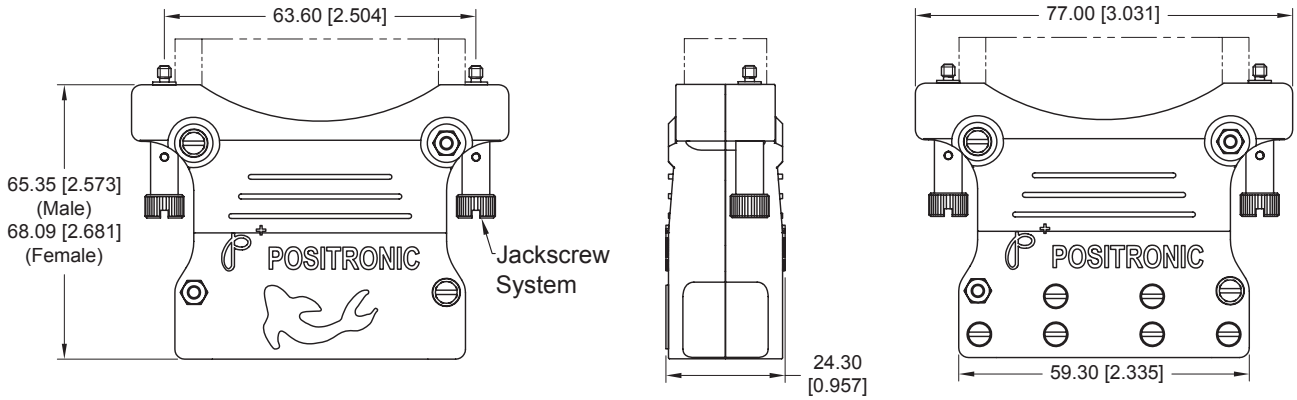

Code W: Hood, cable clamps, hex nuts and screws.
Code WE : Hood, rotating jackscrews, cable clamps, hex nuts and screws.

Standard Hood and Cable Clamps

Materials and Finishes:

Hood Top and Bottom (Qty: 1x each) :	Glass-filled nylon, UL 94-0. Black color.
Cable Clamps (Qty: 3x):	Steel with nickel plate. Screws (Qty: 10x): Brass, zinc plate with chromate seal.
Hex Nuts (Qty: 4x):	Brass, zinc plate with dichromate seal or brass, zinc plate with chromate seal.
Lockwashers (Qty: 4x):	Bronze, zinc plate with dichromate seal or bronze, zinc plate with chromate seal.

Modular Hood and Cable Clamps

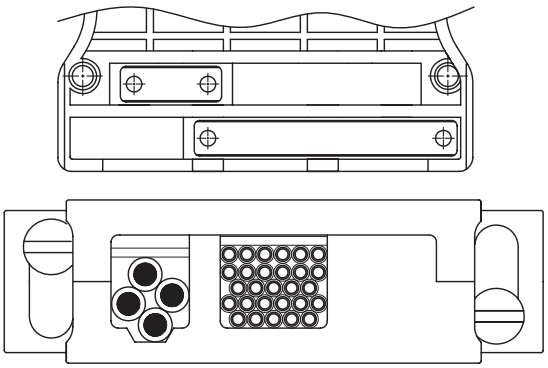

Consult Technical Sales for more customized Cable Clamp or Cable openings.
Note: Hood only available for GFSH02, 435 and 928.
Consult Technical Sales for GFSH89, 109 and 624 hood availability.

Mounting Styles and Contact Hole Patterns for PCB Mount

MOUNTING STYLES

Right Angle (90°) Mounting Brackets
Code B or LN in Step 5

Through Hole (B)

Board Lock (LN)

Material: Brass with zinc or tin plating.

Push-on Fastener
Code N in Step 5

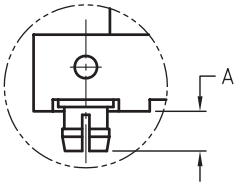

Material: Copper alloy with tin plating.

VARIANT	A
02/435	3.17 [0.124]
109/624	3.42 [0.134]
928	3.37 [0.132]
89	3.34 [0.131]

Float Mounting Hardware
Code 82 or 82 in Step 5

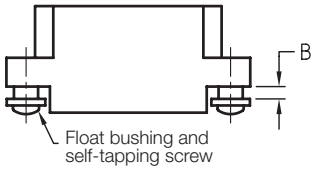

Material: Steel with zinc or tin plating.
Note: For GFSH89 with code 83, consult Technical Sales for availability.

CODE	VARIANT	B
82	02/435/928	2.00 [0.078]
82	109/624	2.13 [0.083]
82	89	1.52 [0.060]
83	02/435/928	2.70 [0.106]
83	109/624	2.84 [0.111]
83	89	2.79 [0.110]

Contact Hole Patterns for Straight PCB Mount

Goldfish 02
Straight PCB Mount
Code 02 in Step 2
Code 3 in Step 4
Code H or N in Step 5

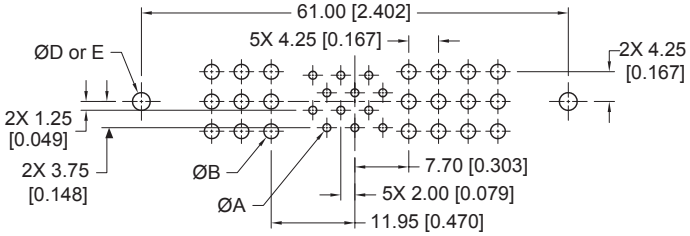

Goldfish 435
Straight PCB Mount
Code 435 in Step 2
Code 3 or 38 in Step 4
Code H or N in Step 5

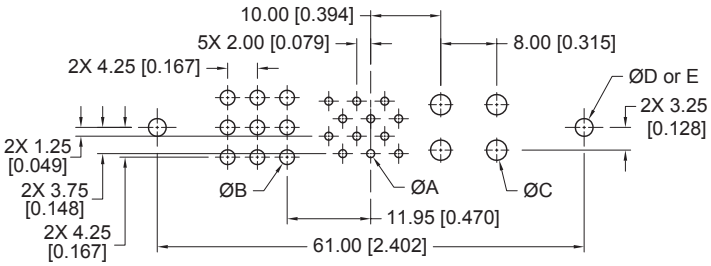

Goldfish 928
Straight PCB Mount
Code 928 in Step 2
Code 3 in Step 4
Code H or N in Step 5

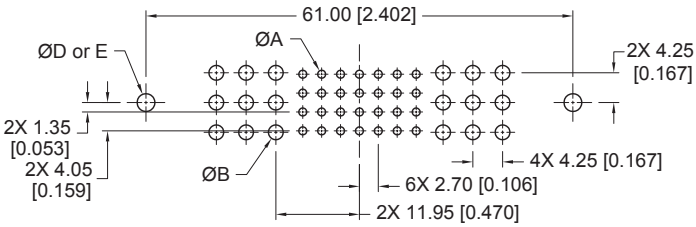

DIM	SUGGESTED SIZE	FOR USE
ØA	Ø1.14 [0.045]	Size 20 & 22 contact terminals
ØB	Ø2.11 [0.083]	Size 16 contact terminals
ØC	Ø2.90 [0.114]	Size 12 contact terminals
ØD	Ø2.54 [0.100]	Mounting connector with screws
ØE	Ø3.12±0.08 [0.123±0.003]	Mounting connector using push-on fasteners

For Suggested Straight Mount PCB Holes Sizes of Compliant Press-Fit Connectors, **please refer to SK6370** or consult Technical Sales for more information. Hole pattern shown is for male connector. Use mirror image for female connector.

Contact Hole Patterns for PCB Mount for Versions 02, 435 and 928

Goldfish 02

Right Angle (90°) Mount

Code 02 in Step 2
Code 4 in Step 4
Code H, B or LN in Step 5

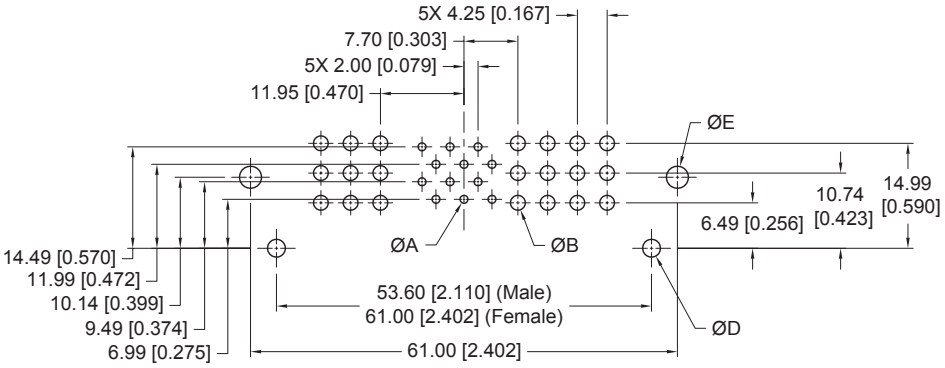

Goldfish 435

Right Angle (90°) Mount

Code 435 in Step 2
Code 4 or 48 in Step 4
Code H, B or LN in Step 5

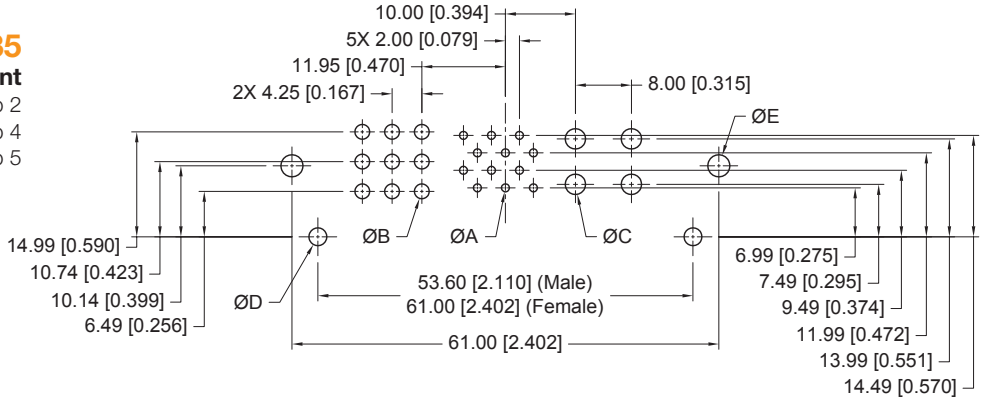

Goldfish 928

Right Angle (90°) Mount

Code 928 in Step 2
Code 4 in Step 4
Code H, B or LN in Step 5

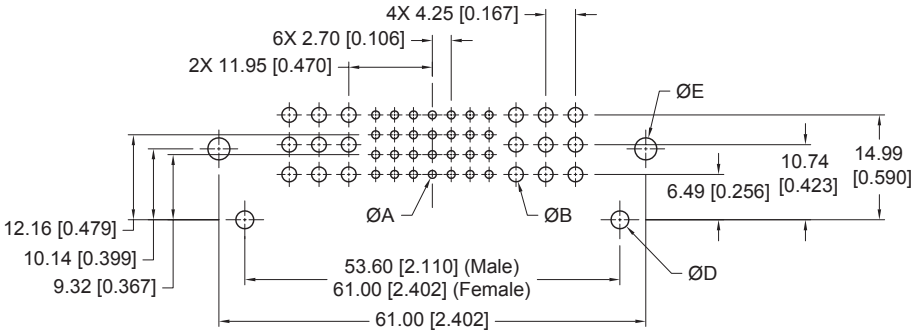

DIM	SUGGESTED SIZE	FOR USE
ØA	Ø1.14 [0.045]	Size 20 & 22 contact terminals
ØB	Ø2.11 [0.083]	Size 16 contact terminals
ØC	Ø2.90 [0.114]	Size 12 contact terminals
ØD	Ø2.54 [0.100]	Mounting connector with screws
ØE	Ø3.12 [0.123]	Mounting connector using angle brackets

For Suggested Straight Mount PCB Holes Sizes of Compliant Press-Fit Connectors, **please refer to SK6370** or consult Technical Sales for more information.
Hole pattern shown is for male connector. Use mirror image for female connector.

Contact Hole Patterns for PCB Mount for Versions 109 and 624

Goldfish 109
Straight PCB Mount
Code 109 in Step 2
Code 3 or 37 in Step 4
Code H or N in Step 5

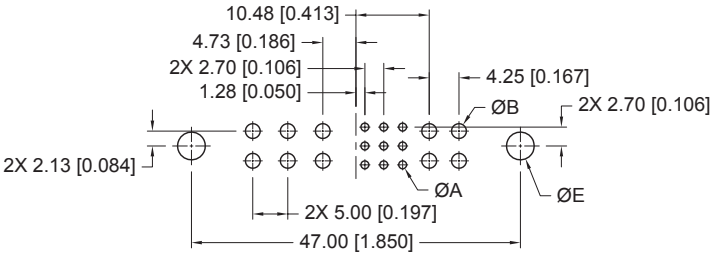

Goldfish 109
Right Angle (90°) Mount
Code 109 in Step 2
Code 4 or 47 in Step 4
Code H, B or LN in Step 5

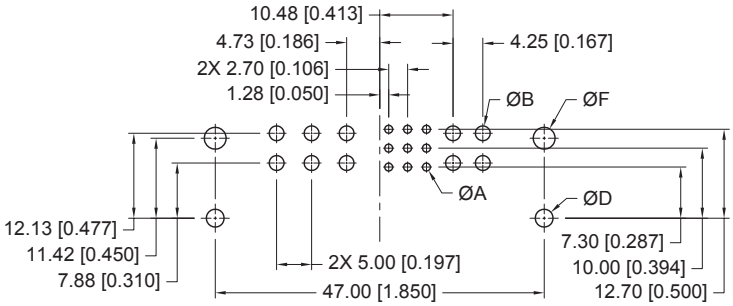

Goldfish 624
Straight PCB Mount
Code 624 in Step 2
Code 3 in Step 4
Code H or N in Step 5

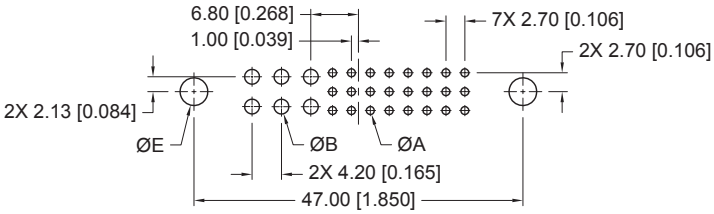

Goldfish 624
Right Angle (90°) Mount
Code 624 in Step 2
Code 4 in Step 4
Code H, B or LN in Step 5

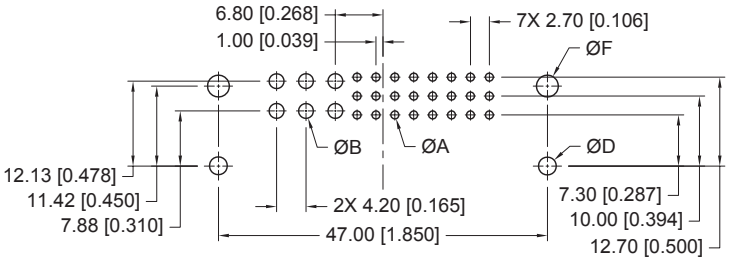

DIM	SUGGESTED SIZE	FOR USE
ØA	Ø1.14 [0.045]	Size 20 & 22 contact terminals
ØB	Ø2.11 [0.083]	Size 16 contact terminals
ØC	Ø2.90 [0.114]	Size 12 contact terminals
ØD	Ø2.54 [0.100]	Mounting connector with screws
ØE	Ø3.96±0.08 [0.156±0.003]	Mounting connector using push-on fasteners
	Ø2.49±0.08 [0.098±0.003]	Mounting connector with jackscrew system
ØF	Ø3.12 [0.123]	Mounting connector using angle brackets

For Suggested Straight Mount PCB Holes Sizes of Compliant Press-Fit Connectors, **please refer to SK6370** or consult Technical Sales for more information.
Hole pattern shown is for male connector. Use mirror image for female connector.

Contact Hole Patterns for PCB Mount for Version 89 and Removable, Solder, Straight PCB Mount Contacts

CONTACT HOLE PATTERNS FOR PCB MOUNT FOR VERSION 89

Straight PCB Mount

Code 89 in Step 2
Code 3 or 37 in Step 4
Code H or N in Step 5

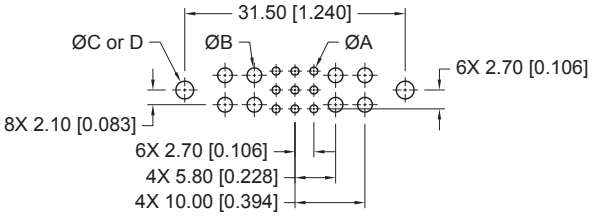

Right Angle (90°) Mount

Code 89 in Step 2
Code 4 or 47 in Step 4
Code H or LN in Step 5

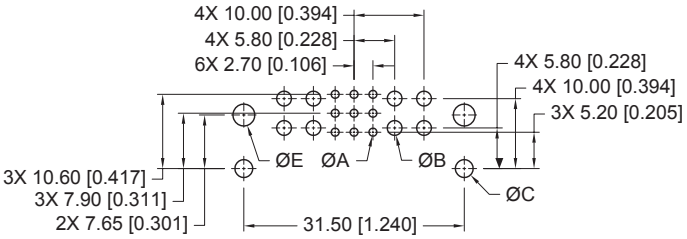

DIM	SUGGESTED SIZE	FOR USE
ØA	Ø1.14 [0.045]	Size 22 contact terminals
ØB	Ø2.11 [0.083]	Size 16 contact terminals
ØC	Ø2.54 [0.100]	Mounting connector with screws
ØD	Ø3.12±0.08 [0.123±0.003]	Mounting connector using push-on fasteners
ØE	Ø3.12 [0.123]	Mounting connector using angle brackets

For Suggested Straight Mount PCB Holes Sizes of Compliant Press-Fit Connectors, **please refer to SK6370** or consult Technical Sales for more information.

REMOVABLE, SOLDER, STRAIGHT PCB MOUNT CONTACTS

Size 12

FDS12G3N2

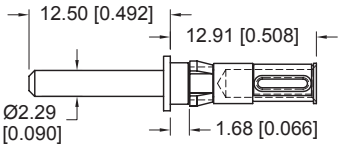

MDS12G3N

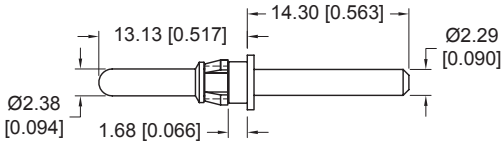

Size 16

FDS16G3N2

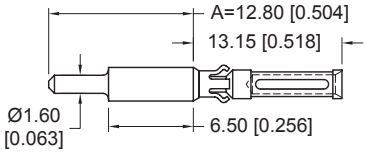

FDS16G3N3, A = 12.00 [0.472]

MDS16G3N

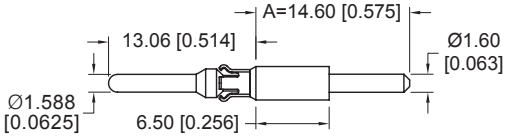

MDS16G3N4, A = 13.31 [0.524]

Size 20

FDS20G3N2

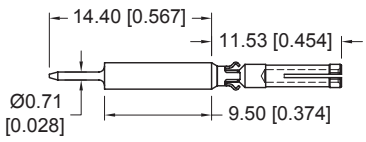

MDS20G3N

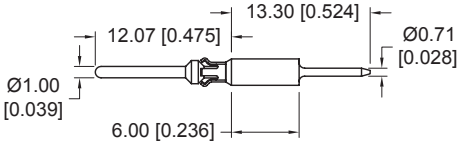

Size 22

FDS22G3N2

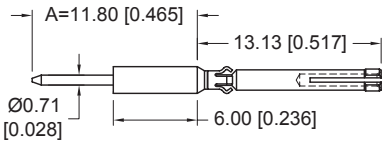

FDS22G3N4, A = 13.51 [0.532]

MDS22G3N

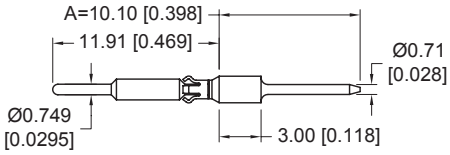

MDS22G3N3, A = 12.00 [0.472]

Material and Finishes: Precision machined copper alloy with gold flash over nickel. Other finishes are available.

Now you can easily mix crimp terminations and PCB mount solder terminations within one connector!
For use in crimp version connectors.

Contact Ordering Information

Connector Variant	Power Contact	Signal Contact
GFSH02F1H	FDS16G3N2	FDS20G3N2
GFSH02M1H	MDS16G3N	MDS20G3N
GFSH109/624F1H	FDS16G3N3	FDS22G3N2
GFSH109/624M1H	MDS16G3N4	MDS22G3N
GFSH435F1H	FDS16G3N5	FDS20G3N5
	FDS12G3N2	
GFSH435M1H	MDS16G3N	MDS20G3N
	MDS12G3N	
GFSH89F1H	FDS16G3N2	FDS22G3N3
GFSH89M1H	MDS16G3N4	MDS22G3N
GFSH928F1H	FDS16G3N2	FDS22G3N4
GFSH928M1H	MDS16G3N	MDS22G3N3

Reference contact tail length is 4.50 [0.177] beyond insulator.
Consult Technical Sales for other contact sizes.

Removable Crimp Contacts and Sequential Mating System

Size 12

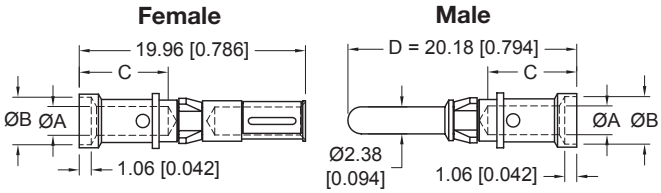

Female Contact	Male Contact	Wire Size*1 AWG [mm²]	ØA	ØB	C
FC610N2	MC610N	10 [6.0]	3.73 [0.147]	N/A	6.45 [0.254]
	MC610N-228.1*2				
FC610N2S*3	MC610NS				
FC612N2	MC612N	12 [4.0]	2.54 [0.100]	4.19 [0.165]	7.90 [0.311]
	MC612N-228.1*2				
FC612N2S*3	MC612NS*3				

*1 **Note:** Please use correct wire size and it should be smaller than ØA of the contact.
*2 First mate contact, D=23.18 [0.913]
*3 High conductive copper alloy

Size 16

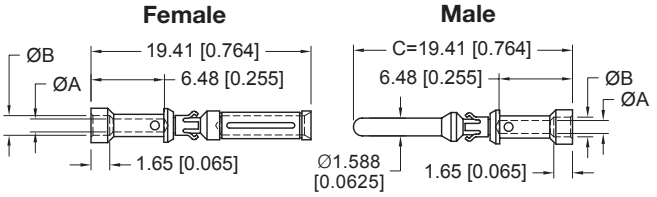

Note: For the first mate contact, it does not apply for GFSH89 version. Consult Technical Sales for sequential mating length.

Female Contact	Male Contact	Wire Size*1 AWG [mm²]	ØA	ØB
FC112N2	MC112N	12 [4.0]	2.49 [0.098]	N/A
	MC112N-133.5*2			
FC112N2S*3	MC112NS*3			
FC114N2	MC114N	14-16 [2.5-1.5]	2.06 [0.081]	2.64 [0.104]
	MC114N-133.5*2			
FC116N2	MC116N	16-18 [1.5-1.0]	1.70 [0.067]	2.36 [0.093]
	MC116N-133.5*2			
FC120N2	MC120N	20-22-24 [0.5-0.3-0.25]	1.14 [0.045]	1.73 [0.068]
	MC120N-133.5*2			

*1 **Note:** Please use correct wire size and it should be smaller than ØA of the contact.
*2 First mate contact, C=21.74 [0.856]
*3 High conductive copper alloy

Size 20

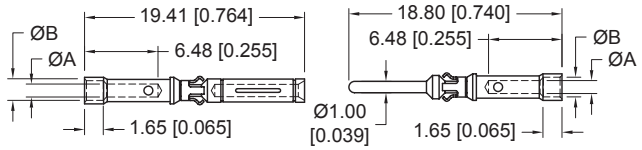

Female Contact	Male Contact	Wire Size*1 AWG [mm²]	ØA	ØB
FC720N2	MC720N	20-22-24 [0.5-0.3-0.25]	1.14 [0.045]	1.73 [0.068]

*1 **Note:** Please use correct wire size and it should be smaller than ØA of the contact.

Size 22

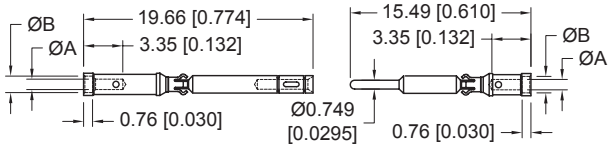

Material and Finishes (standard contact):
Precision machined copper alloy with gold flash over nickel. Other finishes available. Consult Technical Sales for sequential mating and high conductivity material options.

Female Contact	Male Contact	Wire Size*1 AWG [mm²]	ØA	ØB
FC420N6	MC420N	20 [0.5]	1.14 [0.045]	N/A
FC422N6	MC422N	22-24-26 [0.3-0.25-0.12]	0.89 [0.035]	1.63 [0.064]

*1 **Note:** Please use correct wire size and it should be smaller than ØA of the contact.

SEQUENTIAL MATING SYSTEMS

Available in both PCB and Crimp Version Connectors

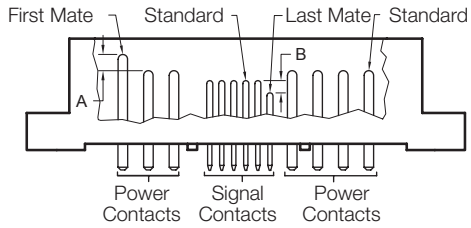

A	B
2.69 [0.106]	2.03 [0.080]

Contact Technical Sales for ordering information.

Dimensions valid for Goldfish 02 PCB mount versions only.

Contact Technical Sales for other versions.

Connector Ordering Information and Automatic Crimp Machine

SPECIFY COMPLETE CONNECTOR BY FOLLOWING STEP 1 THROUGH STEP 6.

Include step 7 for customized connectors.

STEP	1	2	3	4	5	6		7
EXAMPLE	GFSH	02	F	4	LN	/AA	—	XXXXX

STEP 1: Basic Series

GFSH : Goldfish Series

STEP 2: Connector Versions

02 : Connector with 21 size 16 power contacts and 12 size 20 signal contacts.

89 : Connector with 8 size 16 power contacts and 9 size 22 signal contacts.

109 : Connector with 10 size 16 power contacts and 9 size 22 signal contacts.

435 : Connector with 9 size 16 power contacts. 4 size 12 power contacts and 12 size 20 signal contacts.

624 : Connector with 6 size 16 power contacts and 24 size 22 signal contacts.

928 : Connector with 18 size 16 power contacts and 28 size 22 signal contacts.

STEP 3: Connector Gender

F : Female
M : Male

STEP 4: Type of Contact

1 : Removable contact, panel/ float mount/ cable version. (contacts ordered separately).
3 : Solder, straight PCB mount.
4 : Solder, right angle (90°) PCB mount.
37 : Solder, straight PCB mount. (high conductivity size 16 power contacts).
38 : Solder, straight PCB mount, GFSH435 only, (high conductivity size 12 power contacts).
47 : Solder, right angle (90°) PCB mount. (high conductivity size 16 power contacts).
48 : Solder, right angle (90°) PCB mount, GFSH435 only. (high conductivity size 12 power contacts).
93 : Press-fit compliant terminations.
94 : Press-fit compliant terminations.

STEP 5: Mounting Style

H : No hardware. For mounting connector with self-tapping screws. (Order screws separately.)

N : Straight PCB mount push-on fasteners.

B : Right angle (90°) PCB mount through hole angle brackets.

LN : Right angle (90°) PCB mount board lock angle brackets.

82 : Panel/ float mount for 1.5 mm thick panel.

83 : Panel/ float mount for 2.3 mm thick panel.

E : Turnable male jackscrews. (Not available in GFSH624 male panel.)

T : Fixed female jackscrews. (Not available in GFSH89 PCB, GFSH624 Female PCB.)

TB : Fixed female jackscrews with Right angle (90°) PCB mount through hole angle brackets.

TLN : Fixed female jackscrews with Right angle (90°) PCB mount board lock angle brackets.

W*1 : Hood.

WE*1 : Turnable Male Jackscrew with Hood.

*1 Not available in GFSH89, 109 and 624.

STEP 6: Environmental Compliance

/AA : Compliant per EU Directive 2002/95/EC (RoHS)
Note: If no environmental options are required, this step will not be used.
Example: GFSH02F4LN

STEP 7: Special Options

Consult Technical Sales for customization of Goldfish Power Connectors.
Example: selective loading, sequential mating, etc.

AUTOMATIC CRIMP MACHINE

Part No. 9550-0-0-0

This fast cycling and reliable automatic crimp machine produces a four double-indent crimp, meeting Military Standard and proprietary specifications on wire sizes 12 AWG (4.0mm²) through 30 AWG (0.05mm²).

The tool is a bench mount pneumatic unit of compact size and weight. Contacts must be ordered separately and are supplied on a reel in quantities of 2000.

To order, specify part number 9550-0-0-0. Foot pedal control valve is supplied as a standard accessory.

CONTACT CARRIERS

Molded thermoplastic carriers in a continuous belt feed contacts to the crimp station of the automatic feed tool. They also locate the contacts in respect to the tool's indenters. The carriers are color coded white and natural for contact identification for both MS and proprietary applications. Part number for contacts supplied in reels ends with a 'R', example, FC114N2R.

Shown for references only

Machine not sold; for rent only.

Recommended Tools for Crimp Contacts and GG (Great Golden) Series

Contact Extraction Tool

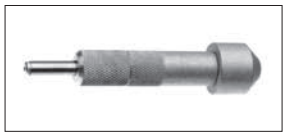

Shown for reference only

Contact Insertion Tool

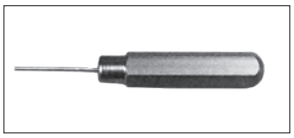

Shown for reference only

Cycle-Controlled Step Adjustable Hand Tool

Shown for reference only

CONTACT SIZE	CONTACT EXTRACTION TOOL	CONTACT INSERTION TOOL	HAND CRIMP TOOL	SEMI-AUTOMATIC CRIMP MACHINE
Size 12	2711-0-0-0	9099-3-0-0	9509-6-0-0 (MC/FC610) 9501-0-0-0 with 9502-19-0-0 positioner (MC/FC612)	-
Size 16	9081-0-0-0	9099-0-0-0	9501-0-0-0 with 9502-1-0-0 positioner 9501-0-0-0 with 9502-17-0-0 positioner (male first mate contacts)	9550-0
Size 20	9081-2-0-0	9099-4-0-0	9507-0-0-0 with 9502-21-0-0 positioner (male contacts) 9507-0-0-0 with 9502-22-0-0 positioner (female contacts)	9550-1
Size 22	9081-3-0-0	9099-1-0-0	9507-0-0-0 with 9502-12-0-0 positioner (male contacts) 9507-0-0-0 with 9502-20-0-0 positioner (female contacts)	9550-1

GG SERIES CONNECTORS

MODULAR TOOLING ALLOWS DELIVERY OF A MULTITUDE OF VARIANTS!

CONTACT VARIANT & DIMENSIONS

Variants shown are not actual size.

Total of 256 Variants

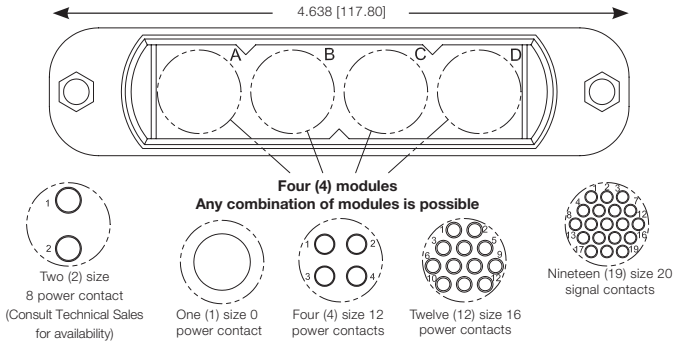

CONTACT SIZE	CONTACT MATERIAL	CONTACT CURRENT RATING	CONTACT RESISTANCE	WORKING VOLTAGE
Size 0	Standard	175 amps	0.00038 ohms	250 V r.m.s
	HC*1	200 amps	0.00012 ohms	
Size 12	Standard	35 amps	0.0016 ohms	500 V r.m.s
	HC*1	45 amps	0.0005 ohms	
Size 16	Standard	20 amps	0.0024 ohms	500 V r.m.s
	HC*1	28 amps	0.0012 ohms	
Size 20	Standard	5 amps	0.0036 ohms	333 V r.m.s

*1 HC = High Conductivity Contact Material

Insulators:	Glass filled nylon, UL 94 V-0, gold color.
Contacts:	Precision machined copper alloy. Plated gold flash over nickel. Other finishes available upon request.
Electrical characteristics:	Contact current ratings to 200 amps per contact in accordance to UL 1977.
Contact resistance:	As low as 0.00012 ohms, per IEC 60512-2, test 2b.
Voltage proof:	Up to 3,000 V r.m.s.
Mechanical operations:	1,000 cycles.
Termination types:	Cable and panel mount – crimp, solder or buss bar. Contact Technical Sales for PCB solder type.
Features:	Excellent blind mating; sequential mating options

LOCATIONS

Positronic®

THE SCIENCE OF CERTAINTY

Divisional Headquarters

Positronic | Americas
423 N Campbell Ave
Springfield MO 65806 USA
+1 800 641 4054
info@connectpositronic.com

Positronic | Europe
Z.I. d'Engachies
46, route d'Engachies
F-32020 Auch Cedex 9 France
+33 5 6263 4491
contact@connectpositronic.com

Positronic | Asia
3014A Ubi Rd 1 #07-01
Singapore 408703
+65 6842 1419
singapore@connectpositronic.com

Sales Offices

Positronic has local sales representation all over the world. To find the nearest sales office, please visit www.connectpositronic.com/sales

Mouser Electronics

Authorized Distributor

Click to View Pricing, Inventory, Delivery & Lifecycle Information:

Positronic:

GFSH435M183 GFSH89F47H/AA GFSH928M1T/AA GFSH435F48LN GFSH89M47H/AA GFSH624M3H/AA GFSH89F3H/AA GFSH928M1H GFSH435M1H/AA GFSH624M1H GFSH89M183/AA GFSH89M4B GFSH89M3H/AA GFSH624M182/AA GFSH89F93H/AA GFSH928F3N GFSH435F1H GFSH89F1E GFSH435F1H/AA GFSH89F1E/AA GFSH928M4T/AA GFSH624F4LN/AA GFSH624M4TB GFSH624F1H GFSH928F1H/AA GFSH89M93H/AA GFSH435F4B GFSH624F93H GFSH624M4H GFSH928F93H/AA GFSH109M4H GFSH89F37H/AA GFSH435F38H/AA GFSH89M37H/AA GFSH435F38H GFSH624M4B GFSH89F1H GFSH928M4LN/AA GFSH435M183/AA GFSH624M3T/AA GFSH89F47LN GFSH89F93H GFSH89M3N GFSH89F47B/AA GFSH89F4LN GFSH928M1T GFSH624F1E GFSH89F4B/AA GFSH89M47LN/AA GFSH624M182 GFSH928F1H GFSH624F3H/AA GFSH624M4B/AA GFSH89M47LN GFSH89F1H/AA GFSH624F93H/AA GFSH89F3N/AA GFSH89F4LN/AA GFSH928M1H/AA GFSH89F182/AA GFSH928M182/AA GFSH624F3H GFSH89M3N/AA GFSH928F93H GFSH435M48B GFSH89M182 GFSH928M4B GFSH624F183/AA GFSH624M183 GFSH89F183/AA GFSH435M4B GFSH89F3H GFSH89M1H/AA GFSH928F1E/AA GFSH928M4LN GFSH435M1H GFSH624M3T GFSH89M3H GFSH89M4LN/AA GFSH624F1E/AA GFSH624M3N/AA GFSH89M4H/AA GFSH109M4LN/AA GFSH624F183 GFSH928F182/AA GFSH928M3H/AA GFSH89F47LN/AA GFSH928M1E/AA GFSH624F182/AA GFSH89M1H GFSH89M37H GFSH928F1E GFSH624M1H/AA GFSH928F182 MC610N/AA

Other:

GFSH109F3N/AA GFSH435F182/AA GFSH89M4B/AA GFSH109M1E/AA GFSH109F3H/AA GFSH109F3T/AA GFSH435F3H/AA GFSH435M3H/AA GFSH02M4LN/AA GFSH109F183/AA GFSH109M1H/AA GFSH89M1E/AA GFSH109M1H GFSH02F1H/AA GFSH109F4LN/AA GFSH109F3H GFSH435M4B/AA GFSH02F3N/AA GFSH109M182/AA GFSH109M37H GFSH02M1H/AA GFSH109F1H/AA GFSH109M182 GFSH435F4B/AA GFSH109F1H GFSH109F182/AA