UL TYPE 1 SPD - Imax 75kA - In 20kA - Modular

AC POWER

DS72US-120S/G

- Multi-MOV Technology
- UL1449 Type 1 LISTED
- 75kA Surge Current Rating per module
- Visual fault indicator and remote contacts
- 10-Year warranty

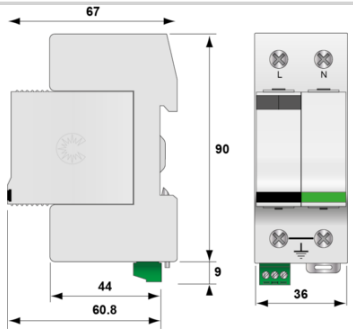

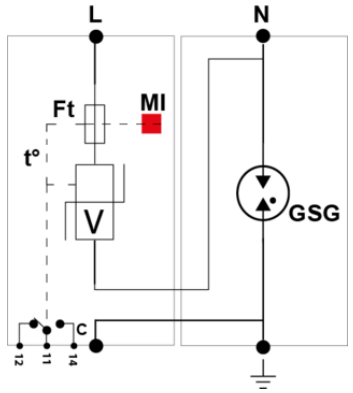

V: High-energy varistor
Ft: Thermal fuse
C: Remote signal contact
t°: Thermal disconnection system
MI: Disconnection indicator

Electrical Characteristics		
POWER SPD TYPE		UL1449 TYPE 1 LISTED
VOLTS	(V)	120
AC/DC/DC PV/RF		AC
PHASE	(PH)	1
AMPS	(A)	n/a
AMBIENT MIN	(C)	-40
AMBIENT MAX	(C)	+85
MODES		L-N, L-G, N-G
VPR	(V)	800/1500/1200
MCOV	(V)	210/255/255
IN(15 impulses 8/20µs)	(kA)	20
SCCR	(kA)	200
IMAX(8/20µs)	(kA)	75
RELATIVE HUMIDITY	(%)	95%
Mechanical Characteristics		
TECHNOLOGY		Multi-MOV+GSG
NETWORK CONFIGURATION		1PH, 2W+G, Single Phase
CONNECTION METHOD		Screw Terminal (8-12AWG)
MOUNTING		DIN RAIL
MATERIAL		Thermoplastic UL94-V0
NEMA RATING (IP RATING)		NEMA 2 (IP20)
FAIL-SAFE BEHAVIOR		Disconnection via fuse-link
REAL-TIME DIAGNOSTICS		Visual indicator and remote contacts
DIMENSIONS		See diagram (mm)
Standards		
UL STANDARD		UL1449 4th Edition
UL CATEGORY		VZCA, VZCA7
UL FILE NUMBER		E326289
STANDARDS		NOM-003-SCFI-2014, NOM-001-SCFI-1993
ENVIRONMENTAL STANDARDS		ROHS
Part number		
32273255		

Mouser Electronics

Authorized Distributor

Click to View Pricing, Inventory, Delivery & Lifecycle Information:

Citel:

DS44S-320/G DS72US-120S/G