1mm Pitch Connectors for Vertical Connection

FX5 Series

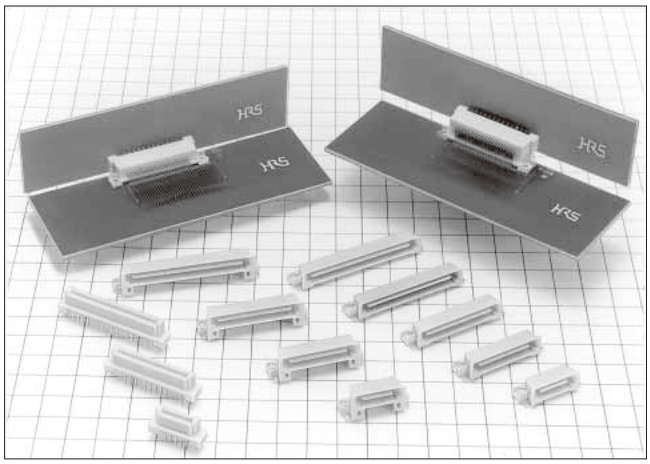

Connecting Height: Low profile

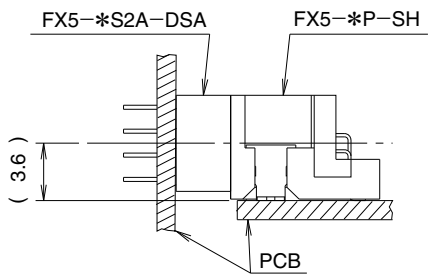

Fig.1

Connecting Height: High profile

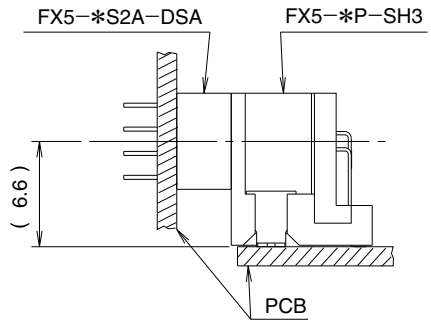

Fig.2

■Features

1. Header Side : 2 Types Available

Two header types are available, low and high profiles. Combined with various contact positions, the FX5 is versatile to work in many application. (See Fig.1 and 2)

2. Two-step, Sequential Mating

The mating sequence features a 2-step, "first mate-last break" condition that helps to protect the circuit.

3. Mating Guide

A guide rib is provided along with a self-alignment range of ± 1mm to allow for easy mating operations.

4. SMT Coplanarity

The coplanarity of SMT soldered area has a high accuracy of 0.1mm.

5. Miniaturization

The FX5 uses about 30% less mounting area on the board compared with a 1.27mm pitch connector.

Apr.1.2022 Copyright 2022 HIROSE ELECTRIC CO., LTD. All Rights Reserved.

■Product Specifications

Ratings	Current rating 0.5A	Operating Temperature Range -55℃ to +85℃ (Note 1)	Storage Temperature Range -10℃ to +60℃ (Note 2)
	Voltage rating 100V AC	Operating Humidity Range 40% to 80%	Storage Humidity Range 40% to 70%

Items	Specifications	Conditions	
1. Insulation Resistance	100M ohms min.	250V DC	
2. Withstanding voltage	No flashover or insulation breakdown.	300V AC/1 minute	
3. Contact Resistance	50m ohms max.	100mA	
4. Vibration Resistance	No electrical discontinuity of 1μs or more	Frequency: 10 to 55 Hz, single amplitude of 0.75 mm, 2 hours in each of the 3 directions.	
5. Moisture Resistance	Contact resistance: 60m ohms max. Insulation resistance: 100M ohms min.	96 hours at temperature of 40℃ and humidity of 90% to 95%	
6. Temperature Cycle	Contact resistance: 60m ohms max. Insulation resistance: 100M ohms min.	(-55℃: 30 minutes, 15 to 35℃: 2 to 3 minutes 85℃: 30 minutes, 15 to 35℃: 2 to 3minutes) 5 cycles	
7. Mating Cycles	Contact resistance: 60m ohms max.	500 cycles	
8. Resistance to Soldering heat	No deformation of components affecting performance.	SMT	Reflow: At the recommended temperature profile Manual soldering: 360°C for 5 seconds
		DIP	Solder Bath: 260℃ for 10 seconds Manual soldering: 360℃ for 5 seconds

Note 1: Includes temperature rise caused by current flow.
Note 2: The term "storage" refers to products stored for a long time prior to use. Operating temperature and humidity range includes a non-conducting state of installed connectors in storage, shipment, or during transportation.

■Material

Part	Material	Finish	Remarks
Insulator	Polyamide	Beige	UL94V-0
Header Contact	Brass	Contact area : Gold plated	———
Receptacle Contact	Phosphor bronze	Lead area : Tin plated	———

Note : The black dots on the insulater will not affect performance

■Product Number Structure

●Header

FX5 – ＊ P – SH 3
❶ ❷ ❸ ❹ ❺

❶ Series Name : FX5	❺ Connector Height Blank : 6.5mm 3 : 9.5mm
❷ Number of Contacts : 20, 40, 52, 56, 68, 80	
❸ Connector Type P: Header	
❹ Contact type SH : Right angle SMT type	

Note: The 56 contact header is for SH 3 type only.

●Receptacle

FX5 – ＊ S 2 A – DSA L
❶ ❷ ❸ ❹ ❺ ❻ ❼

❶ Series Name : FX5	❻ Contact type DSA : Straight through hole type
❷ Number of Contacts : 20, 40, 52, 56, 68, 80	
❸ Connector Type S: Receptacle	❼ Board prefixed pin Blank : Without board prefixed pin L : With board Prefixed pin
❹ Contact Sequence 2 : 2 Stages Sequence	
❺ Serial No. : A	

Apr.1.2022 Copyright 2022 HIROSE ELECTRIC CO., LTD. All Rights Reserved.

■Header

●Low profile

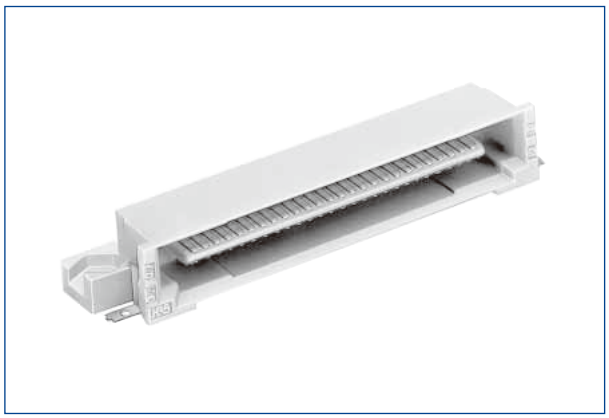

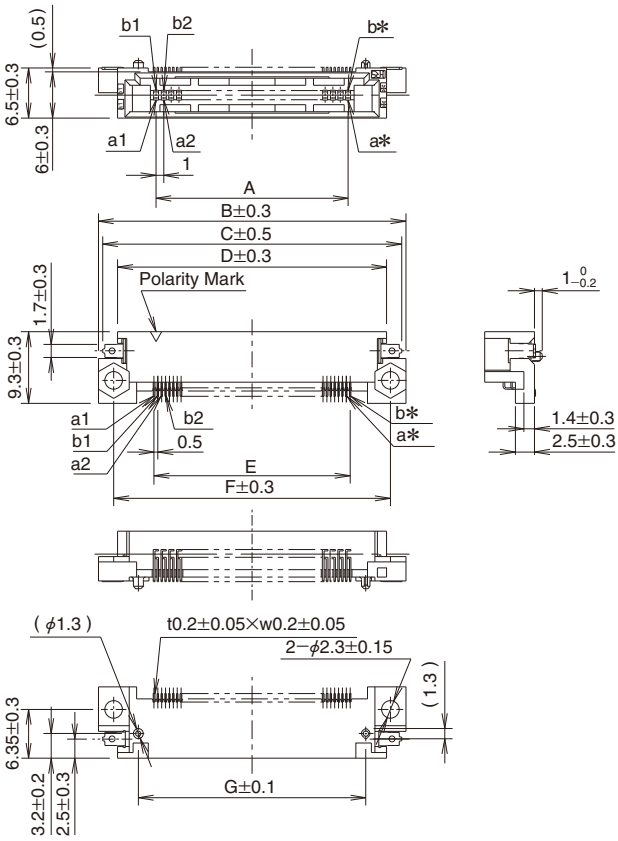

●High profile

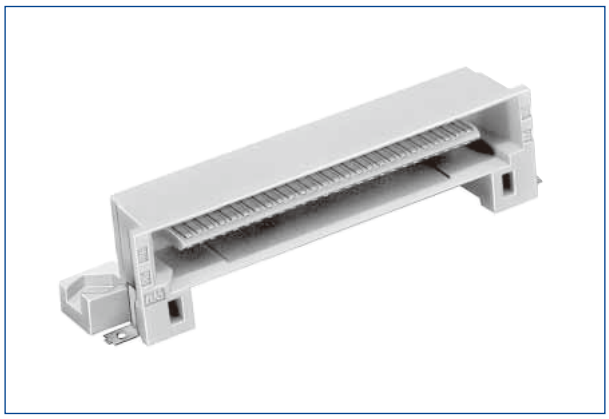

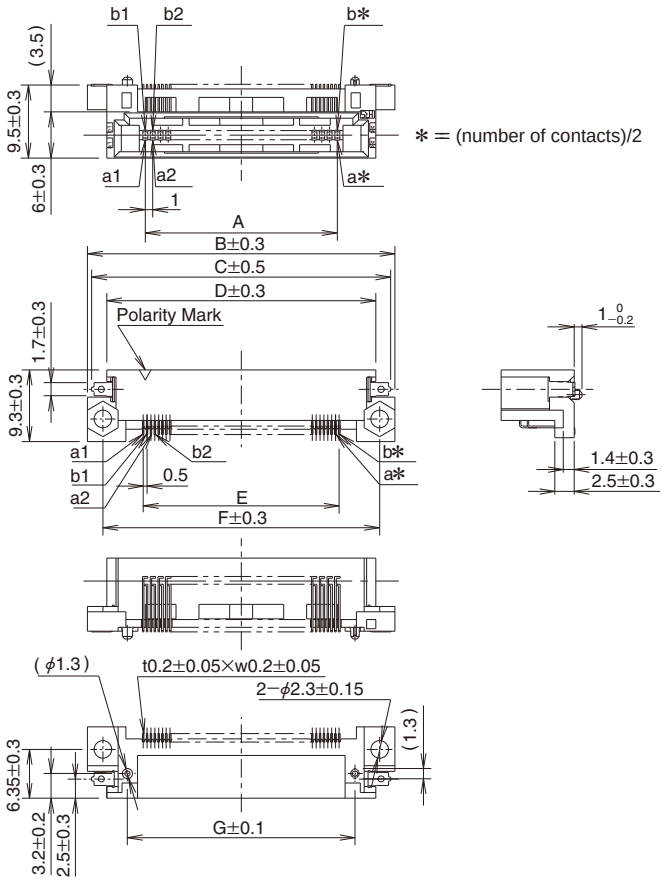

＊＝(number of contacts)/2

Unit: mm

Part No.	HRS No.	No. of contacts	A	B	C	D	E	F	G	RoHS
FX5-20P-SH(71)	575-0001-7 71	20	9	24	22.9	19	9.5	20	13.6	Yes
FX5-20P-SH3(71)	575-0041-1 71									
FX5-40P-SH(71)	575-0005-8 71	40	19	34	32.9	29	19.5	30	23.6	
FX5-40P-SH3(71)	575-0045-2 71									
FX5-52P-SH(71)	575-0006-0 71	52	25	40	38.9	35	25.5	36	29.6	
FX5-52P-SH3(71)	575-0046-5 71									
FX5-56P-SH3(71)	575-1001-2 71	56	27	42	40.9	37	27.5	38	31.6	
FX5-68P-SH(71)	575-0008-6 71	68	33	48	46.9	43	33.5	44	37.6	
FX5-68P-SH3(71)	575-0048-0 71									
FX5-80P-SH(71)	575-0009-9 71	80	39	54	52.9	49	39.5	50	43.6	
FX5-80P-SH3(71)	575-0049-3 71									

Apr.1.2022 Copyright 2022 HIROSE ELECTRIC CO., LTD. All Rights Reserved.

■Receptacle

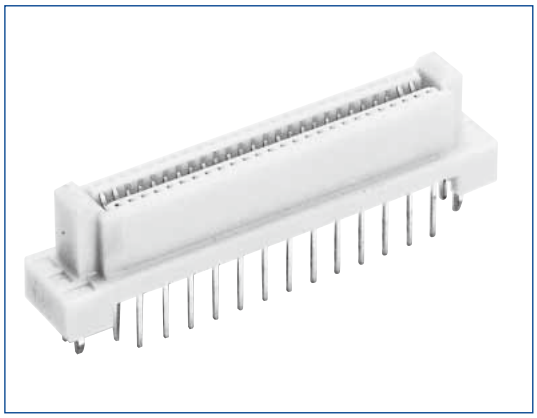

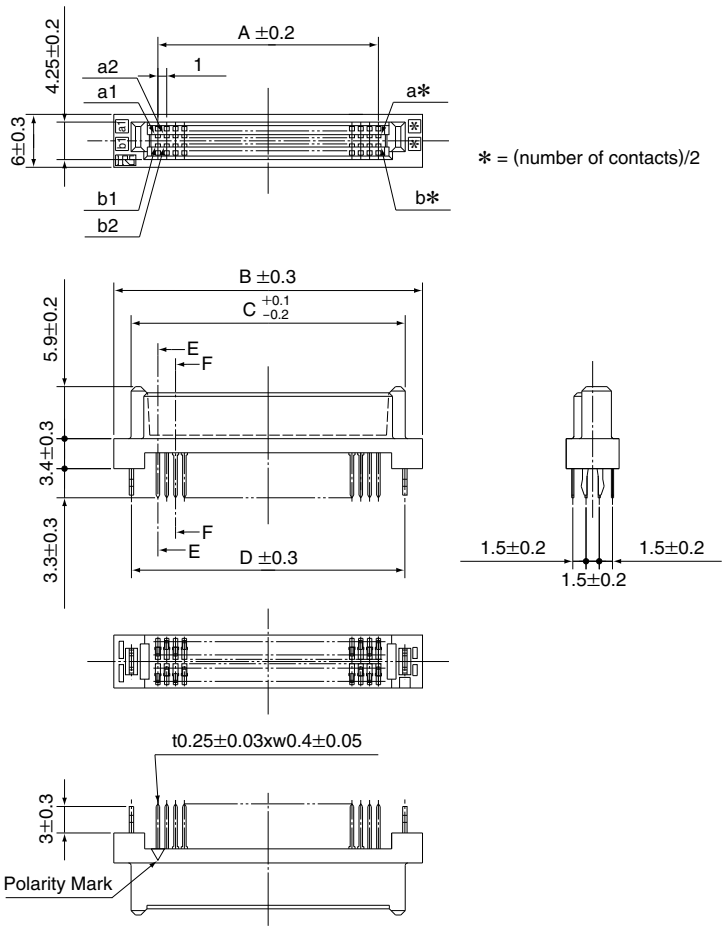

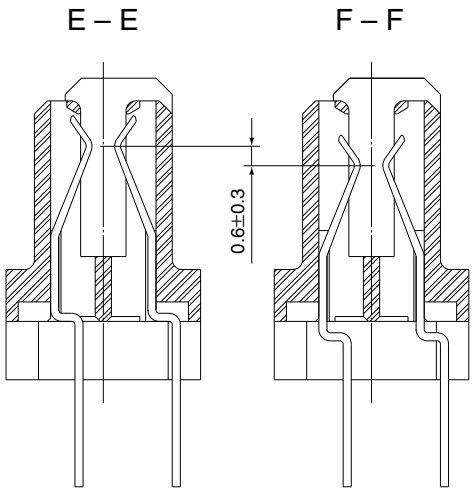

Unit: mm

Part No.	HRS No.	No. of contacts	A	B	C	D	Order of Contact Sequence(Contact No.) 1	Order of Contact Sequence(Contact No.) 2	RoHS
FX5-20S2A-DSA(71)	575-0101-1 71	20	9	19	15.08	—	a1,a2,a9,a10	a3 to a8	Yes
FX5-20S2A-DSAL(71)	575-0121-9 71					15	b1,b2,b9,b10	b3 to b8	
FX5-40S2A-DSA(71)	575-0105-2 71	40	19	29	25.08	—	a1,a2,a19,a20	a3 to a18	
FX5-40S2A-DSAL(71)	575-0125-0 71					25	b1,b2,b19,b20	b3 to b18	
FX5-52S2A-DSA(71)	575-0106-5 71	52	25	35	31.08	—	a1,a2,a25,a26	a3 to a24	
FX5-52S2A-DSAL(71)	575-0126-2 71					31	b1,b2,b25,b26	b3 to b24	
FX5-56S2A-DSA(71)	575-0107-8 71	56	27	37	33.08	—	a1,a2,a27,a28	a3 to a26	
FX5-56S2A-DSAL(71)	575-0127-5 71					33	b1,b2,b27,b28	b3 to b26	
FX5-68S2A-DSA(71)	575-0108-0 71	68	33	43	39.08	—	a1,a2,a33,a34	a3 to a32	
FX5-68S2A-DSAL(71)	575-0128-8 71					39	b1,b2,b33,b34	b3 to b32	
FX5-80S2A-DSA(71)	575-0109-3 71	80	39	49	45.08	—	a1,a2,a39,a40	a3 to a38	
FX5-80S2A-DSAL(71)	575-0129-0 71					45	b1,b2,b39,b40	b3 to b38	

Apr.1.2022 Copyright 2022 HIROSE ELECTRIC CO., LTD. All Rights Reserved.

Apr.1.2022 Copyright 2022 HIROSE ELECTRIC CO., LTD. All Rights Reserved.

◆PCB mounting pattern

●Header

FX5-∗-SH, FX5-∗-SH3

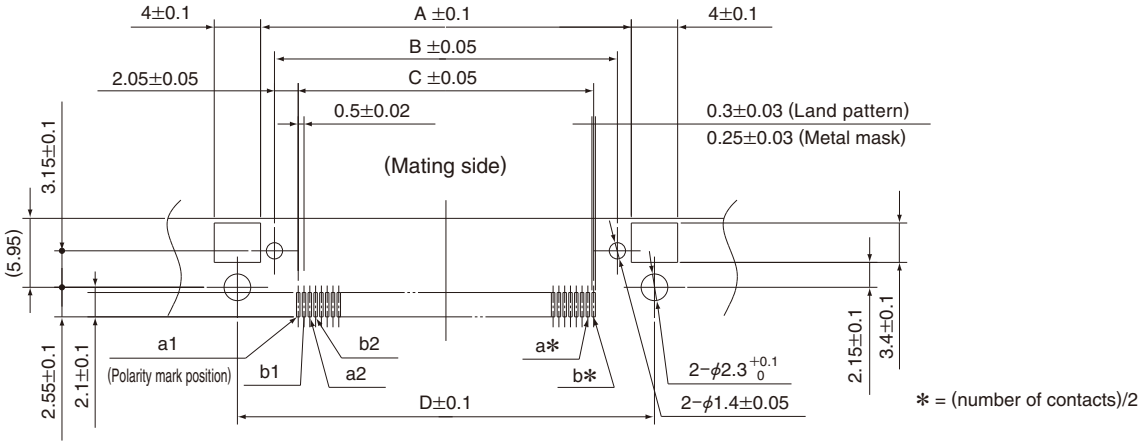

●Receptacle

FX5-∗S2A-DSA

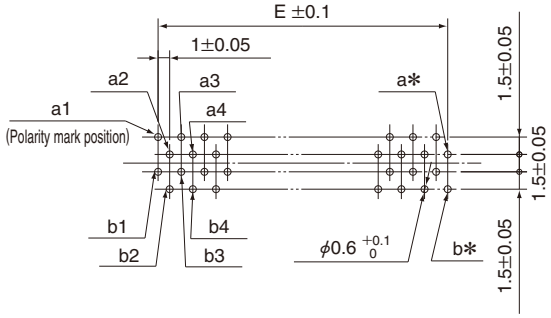

FX5-∗S2A-DSAL

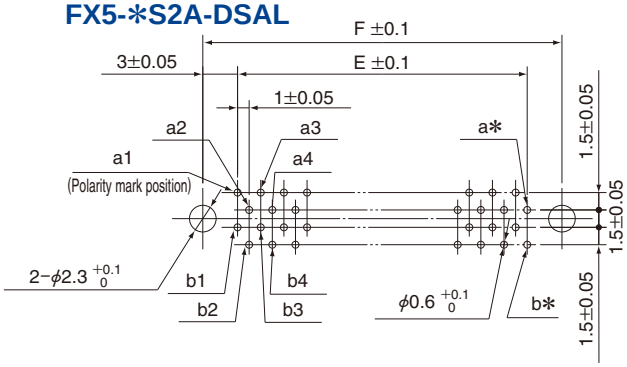

Unit: mm

No. of contacts	A	B	C	D	E	F
20	16	13.6	9.5	20	9	15
40	26	23.6	19.5	30	19	25
52	32	29.6	25.5	36	25	31
56	34	31.6	27.5	38	27	33
68	40	37.6	33.5	44	33	39
80	46	43.6	39.5	50	39	45

Note: If the connector uses a mounting area over the recommended size, it could cause defects in mounting and soldering.
For best results, mount the connector using the recommended PCB mounting pattern.

◆Recommended Temperature Profile

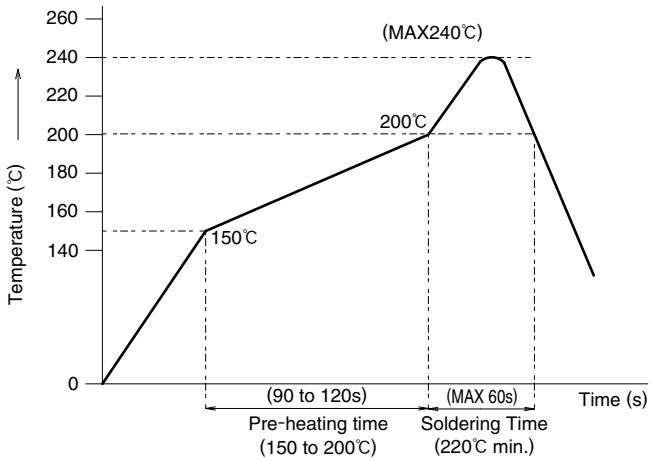

HRS test conditions

Test boardGlass epoxy 110mm×40mm×1.6mm thick
Solder method :Reflow
Solder composition :Paste, 96.5%Sn/3%Ag/0.5%Cu
Metal mask : 0.15mm thick
Reflow cycles : 1 cycles

The temperature profile is based on the above conditions.
In individual applications the actual temperature may vary, depending on solder paste type, volume/thickness and board size/thickness. Consult your solder paste and equipment manufacturer for specific recommendations.

◆Cleaning Conditions

1. Organic Solvent Cleaning

Solvent	Cold Cleaning	
IPA (Isopropyl alcohol)	Yes	Yes

∗Methylene chloride is not suitable for this product.

2. Liquid Cleaning

2. When cleaning with liquid detergents (e.g. terpene, alkali saponifiers), consult the manufacturer's specifications and make make sure that the cleaner is suitable for use with the metal and resin components of this connector. Also, do not leave the connector outside where it moisture could infiltrate the product.

3. Cautions for Cleaning

3. If any organic solvent or other liquid cleaner or flux remains in the connector, it can cause eletrical performance degradation. Please make sure that the connector is completely free of any cleaner or flux before use.

Apr.1.2022 Copyright 2022 HIROSE ELECTRIC CO., LTD. All Rights Reserved.

◆Connector Precautions

1. Tolerance Clearance on Mating Side

The effective clearance of this product is 1.6mm. Please make sure that your design accounts for 1mm mating clearance between the header and receptacle.

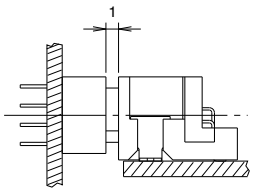

2. Header Connector Height

Because the SMT height specification for the header does not account for the thickness of the solder paste, please remember to account for the extra height in the total stacking height.

Mating Height: Low profile

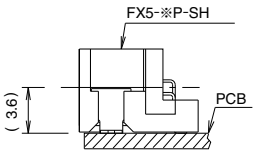

Mating Height: High profile

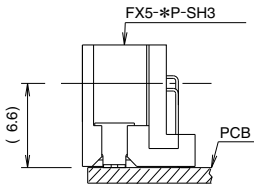

3. Screw Fastening Torque (SMT Type)

When the screw is fastened, please use the M2 screw. The recommended fastening torque is 0.15(N.m) max.

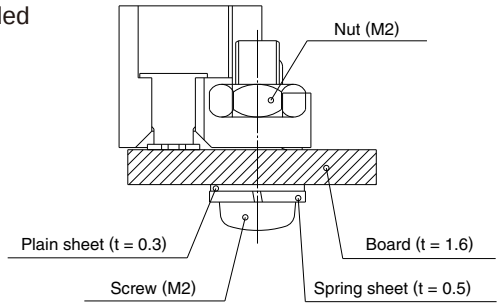

4. Prefixed Process to Board (Through hole Type)

If the prefixed process is required for board mounting, please use the prefixed pin type. (Applicable Thickness t = 1.6±0.1)

Note:

When the connector is mounted on the board, the dip post is guided into the through-hole first. To prevent dip post damage, make sure that the connector is parallel to the board during this process.

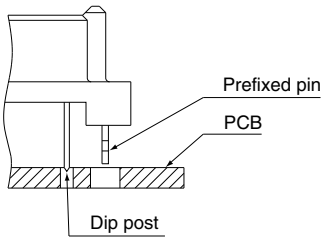

5. Plug and Play

Please consult your Hirose representative if you will be mating/unmating the connector while the circuit is energized.

6. Others

- Excessive force during mating/unmating will damage the connector.
- Avoid using the mated connectors as a means of holding the PCB together. The PCBs need to be secured together with screws, spacers or other means which do not rely on the connectors as the primary support mechanism.
- The resin color of the product may vary slightly with different production lots. This does not effect the performance.

Apr.1.2022 Copyright 2022 HIROSE ELECTRIC CO., LTD. All Rights Reserved.

USA:
HIROSE ELECTRIC (U.S.A.), INC. HEADQUARTERS
2688 Westhills Court, Simi Valley, CA 93065-6235
Phone : +1-805-522-7958
Fax : +1-805-522-3217
http://www.hirose.com/us/

USA:
HIROSE ELECTRIC (U.S.A.), INC. SAN JOSE OFFICE
3255 Scott Boulevard, Building 7, Suite 101
Santa Clara, CA 95054
Phone : +1-408-253-9640
Fax : +1-408-253-9641
http://www.hirose.com/us/

USA:
HIROSE ELECTRIC (U.S.A.), INC. CHICAGO OFFICE
580 Waters Edge Lane, Suite 205 Lombard IL 60148
Phone : +1-630-282-6701
Mail : inquiries@hirose.com
http://www.hirose.com/us/

USA:
HIROSE ELECTRIC (U.S.A.), INC. DETROIT OFFICE (AUTOMOTIVE)
17197 N. Laurel Park Drive, Suite 253, Livonia, MI 48152
Phone : +1-734-542-9963
Fax : +1-734-542-9964
http://www.hirose.com/us/

THE NETHERLANDS:
HIROSE ELECTRIC EUROPE B.V.
Hogehillweg #8 1101 CC Amsterdam Z-O
Phone : +31-20-6557460
Fax : +31-20-6557469
http://www.hirose.com/eu/

GERMANY:
HIROSE ELECTRIC EUROPE B.V. GERMAN BRANCH
Herzog-Carl-Strasse 4 D-73760 Ostfildern (Scharnhauser Park)
Phone : +49-711-4560-02-1
Fax : +49-711-4560-02-299
http://www.hirose.com/eu/

GERMANY:
HIROSE ELECTRIC EUROPE B.V. NUERNBERG OFFICE
Muggenhofer Str. 136 90429 Nuernberg
Phone : +49-911 32 68 89 63
Fax : +49-911 32 68 89 69
http://www.hirose.com/eu/

GERMANY:
HIROSE ELECTRIC EUROPE B.V. HANOVER OFFICE
Bayernstr. 3, Haus C 30855 Langenhagen, Germany
Phone : +49-511 97 82 61 30
Fax : +49-511 97 82 61 35
http://www.hirose.com/eu/

FRANCE:
HIROSE ELECTRIC EUROPE B.V. PARIS OFFICE
Regus La Garenne Colombes,Place de La Belgique, 71 Boulevard National La Garenne Colombes, 92250, France
Phone : +33 (0) 1 7082 3170
Fax : +33 (1) 7082 3101
http://www.hirose.com/eu/

UNITED KINGDOM:
HIROSE ELECTRIC EUROPE BV (UK BRANCH)
4 Newton Court, Kelvin Drive, Knowlhill, Milton Keynes, MK5 8NH
Phone : +44-1908 202050
Fax : +44-1908 202058
http://www.hirose.com/eu/

CHINA:
HIROSE ELECTRIC (SHANGHAI) CO., LTD.
1601, Henderson Metropolitan, NO.300, East Nanjing Road, Huangpu District, Shanghai, China 200001
Phone : +86-21-6391-3355
Fax : +86-21-6391-3335
http://www.hirose.com/cn/

CHINA:
HIROSE ELECTRIC (SHANGHAI) CO.,LTD. BEIJING BRANCH
A1001, Ocean International Center, Building 56# East 4th Ring Middle Road, ChaoYang District, Beijing, 100025
Phone : +86-10-5165-9332
Fax : +86-10-5908-1381
http://www.hirose.com/cn/

CHINA:
HIROSE ELECTRIC TECHNOLOGIES (SHENZHEN) CO., LTD.
Room 09-13, 19/F, Office Tower Shun Hing Square, Di Wang Commercial Centre, 5002 Shen Nan Dong Road, Shenzhen City, Guangdong Province, 518008
Phone : +86-755-8207-0851
Fax : +86-755-8207-0873
http://www.hirose.com/cn/

HONG KONG:
HIROSE ELECTRIC HONGKONG TRADING CO., LTD.
Room 1001, West Wing, Tsim Sha Tsui Centre, 66 Mody Road, Tsim Sha Tsui East, Kowloon, Hong Kong
Phone : +852-2803-5338
Fax : +852-2591-6560
http://www.hirose.com/hk/

TAIWAN:
HIROSE ELECTRIC TAIWAN CO., LTD.
103 8F, No.87, Zhengzhou Rd., Taipei
Phone : +886-2-2555-7377
Fax : +886-2-2555-7350
http://www.hirose.com/tw/

KOREA:
HIROSE KOREA CO., LTD.
250, Huimanggongwon-ro, Siheung-si, Gyeonggi-do, Korea, 429-849
Phone : +82-31-496-7000,7124
Fax : +82-31-496-7100
http://www.hirose.co.kr/

SINGAPORE:
HIROSE ELECTRIC SINGAPORE PTE. LTD.
10 Anson Road #26-16, International Plaza 079903, Singapore
Phone : +65-6324-6113
Fax : +65-6324-6123
http://www.hirose.com/sg/

INDIA:
HIROSE ELECTRIC SINGAPORE PTE. LTD. DELHI LIAISON OFFICE
Office NO.519, Regus-Green Boulevard, Level5, Tower C, Sec62, Plot B-9A, Block B, Noida, 201301, Uttar Pradesh, India
Phone : +91-12-660-8018
Fax : +91-120-4804949
http://www.hirose.com/sg/

INDIA:
HIROSE ELECTRIC SINGAPORE PTE. LTD. BANGALORE LIAISON OFFICE
Unit No-403, 4th Floor, No-84, Barton Centre, Mahatma Gandhi (MG) Road, Bangalore 560 001, Karnataka, India
Phone : +91-80-4120 1907
Fax : +91-80-4120 9908
http://www.hirose.com/sg/

MALAYSIA:
HIROSE ELECTRIC SINGAPORE PTE. LTD.
1-10-07, Suntech @ Penang Cybercity (1164),Lintang Mayang Pasir 3,11950, Bayan Baru, Penang, Malaysia.
Phone : +604-619-2564
Fax : +604-619-2574
http://www.hirose.com/sg/

THAILAND:
HIROSE ELECTRIC SINGAPORE PTE. LTD.
BANGKOK OFFICE (REPRESENTATIVE OFFICE)
Unit 4703, 47th FL., 1 Empire Tower, South Sathorn Road, Yannawa, Sathorn, Bangkok 10120 Thailand
Phone : +66-2-686-1255
Fax : +66-2-686-3433
http://www.hirose.com/sg/

Creative Links to World Electronics ®

HRS

HIROSE ELECTRIC CO.,LTD.
2-6-3,Nakagawa Chuoh,Tsuzuki-Ku,Yokohama-Shi 224-8540,JAPAN
TEL: +81-45-620-3526 Fax: +81-45-591-3726
http://www.hirose.com
http://www.hirose-connectors.com

Apr.1.2022 Copyright 2022 HIROSE ELECTRIC CO., LTD. All Rights Reserved.

HRS The characteristics and the specifications contained herein are for reference purpose. Please refer to the latest customer drawings prior to use.
The contents of this catalog are current as of date of 04/2015. Contents are subject to change without notice for the purpose of improvements.