HAMMOND MANUFACTURING

Quality Products. Service Excellence.

Large Rainproof Ventilator *SDV LG*

- Designed to equalize internal / external pressure and temperature
- Ventilators assist in condensation prevention by allowing enclosures to breathe
- Suitable for most types of metallic and non-metallic enclosures
- Molded in corrosion resistant UV stabilized polycarbonate, finish RAL7035 Light Gray
- Gasket protection to enclosure wall
- Approximately 2.73" (69mm) high x 1.99" (51mm) wide
- Mount to enclosure wall thickness up to .16” (4mm) with standard screws
- Internal vent channel & grille reduces insect intrusion
- Complies with NEMA Type 3R, IEC 60529 IP24
- Package quantity 1

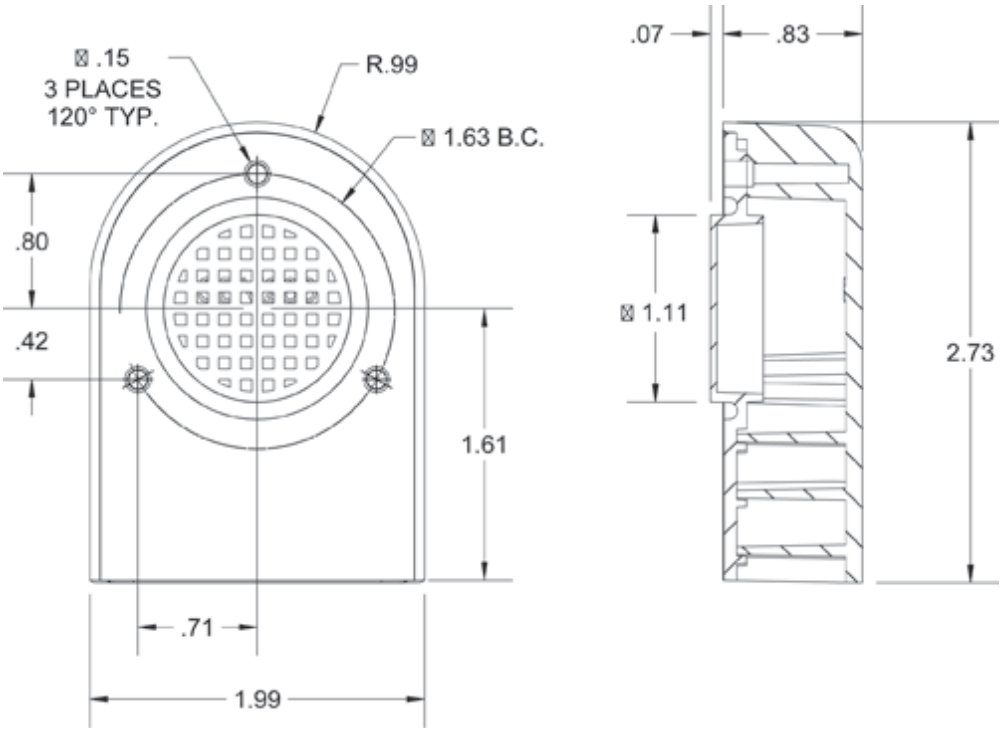

Part No.	SDV280-1

Data subject to change without notice

© 2021. Hammond Manufacturing Ltd. All rights reserved.