Product Data Sheet
ADC-2G-18G-10-SF-01
Broadband Directional Coupler, 10dB, 2 – 18 GHz, SMA-F

- **Revision history**

Rev.	Change	Date
00	Initial Version	2020-06-14

- **Specification**

Parameter	Unit	Specification
Frequency Range	GHz	2 -18
Insertion Loss	dB	0.8 max (Excluding coupling loss
VSWR		1.5:1 max
Coupling	dB	10 +/- 1
Directivity	dB	15 min
Power Handling	W	≤ 50W
Impedance	-	50 ohms
Connector		SMA (F) – All ports
Operating Temperature	℃	-40 ~ +85°C
Weight	kg	0.035
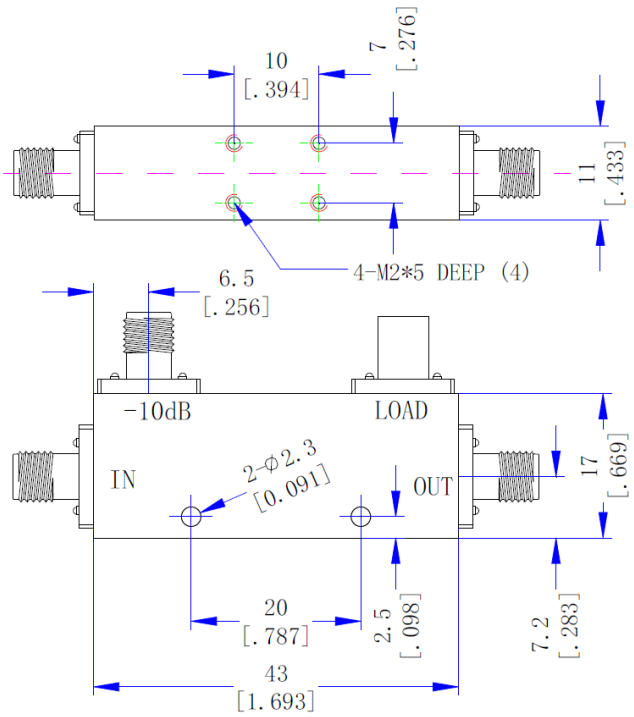
Mechanical dimensions (Unit: mm)