Downloaded from Arrow.com.

REVISIONS			
REV	DESCRIPTION, ECN, EAR NO.	DATE	APP'D
A	NEW PROPOSAL RELEASE	JUL11/2018	L.CHAN

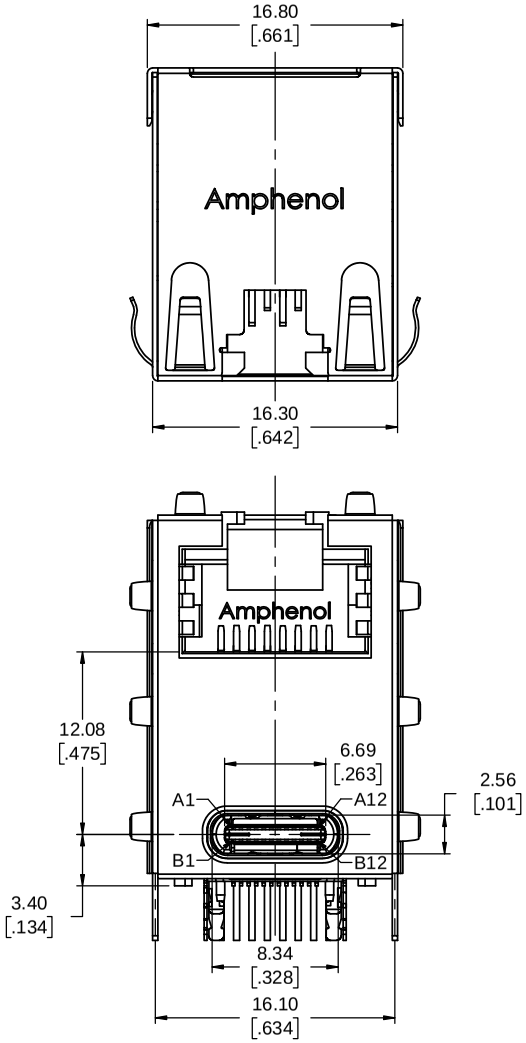

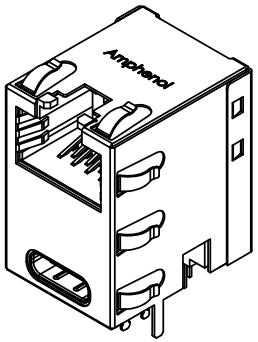

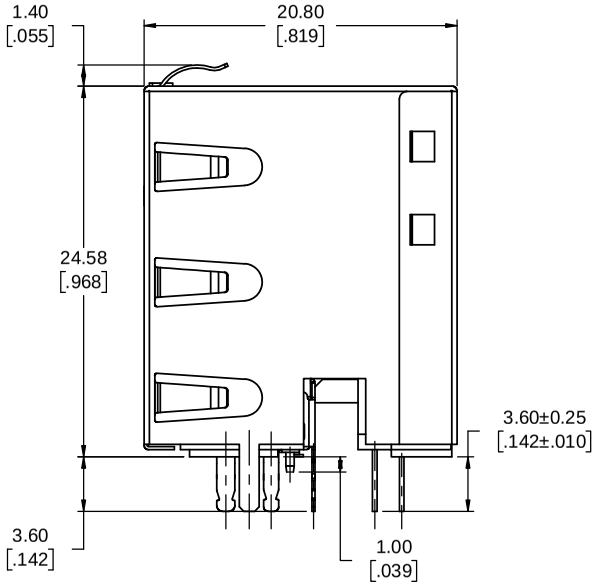

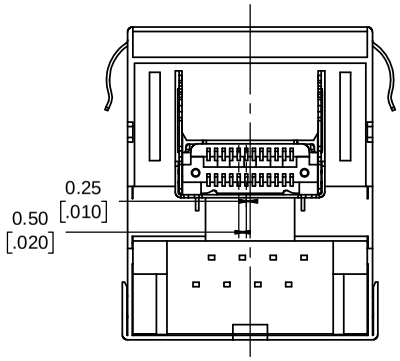

NOTES:

1. RJ45:
   HOUSING: HIGH TEMPERATURE THERMOPLASTIC FLAMMABILITY RATING UL 94V-0, COLOR: BLACK
   CONTACTS: PHOSPHOR BRONZE, PLATING: SELECTIVE GOLD PLATING ON THE MATING AREA, 50u" [1.27 MICRONS] MIN. NICKEL UNDERPLATE, WITH 100u" MATTE TIN PLATING ON THE TAILS,
   SHIELD: STAINLESS STEEL WITH TIN FINISHED PCB TAILS.
   RJ45 PORT CAPABLE OF SUPPORTING 1000BASE-T or 2.5GBASE-T.
   CATEGORY 5e PERFORMANCE:

FREQUENCY MHZ	NEAR-END CROSS TALK dB,MIN.	RETURN LOSS dB , MIN.	INSERTION LOSS dB,MAX.
1.0	65	30	0.1
4.0	65	30	0.1
8.0	64.9	30	0.1
10.0	63	30	0.1
16.0	58.9	30	0.2
20.0	57	30	0.2
25.0	55	30	0.2
31.25	53.1	30	0.2
62.5	47.1	24.1	0.3
100.0	43	20	0.4

2. TYPE C
   HOUSING: HIGH TEMPERATURE THERMOPLASTIC FLAMMABILITY RATING UL 94V-0, COLOR: BLACK
   CONTACTS: PHOSPHOR BRONZE
   PLATING: 30u" [0.76 MICRONS] MIN. GOLD OVER 50u" [1.27 MICRONS] MIN. NICKEL ON THE MATING AREA WITH MATTE TIN OVER NICKEL ON THE TAILS.
   SHIELD: STAINLESS STEEL, 50u" [1.27 MICRONS] MIN. NICKEL OVERALL .

AMPHENOL PART NUMBER: RJE4E-188-1X01

GOLD PLATING OPTION
1= 6u" GOLD PLATING
2= 15u" GOLD PLATING
3= 30u" GOLD PLATING
4= 50u" GOLD PLATING

AMPHENOL CANADA CORP RoHS COMPLIANT 2011/65/EU RECAST

UNLESS SPECIFIED OTHERWISE	DRAWN	JACK.GUO	JUL11/18
PRIMARY UNITS MILLIMETERS	CHECKED	L.CHAN	JUL11/18
SECONDARY INCHES	M.E. APP'D		
REFERENCE IN PARENTHESES	Q.A. APP'D		
GENERAL TOLERANCES	DWG APPR.	A.GREEN	JUL11/18
1 DECIMAL PLACE ±0.38	ENG. REL. NO.		
2 DECIMAL PLACES ±0.25	REF.	EAR RJ18136	
3 DECIMAL PLACES ±0.13	THIRD ANGLE PROJECTION		DO NOT SCALE DRAWING
ANGULAR DEGREES ±1.5°			

Amphenol Canada Corp.
Commerical Products

TITLE
RJ45(CAT5e) OVER USB TYPE C MODULAR JACK, 8P8C, SHIELDED WITH TOP AND SIDE TABS, WITHOUT LED, SUITABLE FOR REFLOW PROCESS, ESD TRAY PACKAGE - RoHS COMPLIANT

DWG. NO. P-RJE4E-188-1X01 REV A

CODE ID NO. 03554 | DWG SIZE: X | SCALE: 4:1 | SHEET 1 OF 3

THIS DOCUMENT CONTAINS PROPRIETARY INFORMATION AND SUCH INFORMATION MAY NOT BE DISCLOSED TO OTHERS FOR ANY PURPOSE OR USED FOR MANUFACTURING PURPOSES WITHOUT WRITTEN PERMISSION FROM AMPHENOL CANADA CORP.

Downloaded from Arrow.com.

REVISIONS			
REV	DESCRIPTION, ECN, EAR NO.	DATE	APP'D
A	NEW PROPOSAL RELEASE	JUL11/2018	L.CHAN

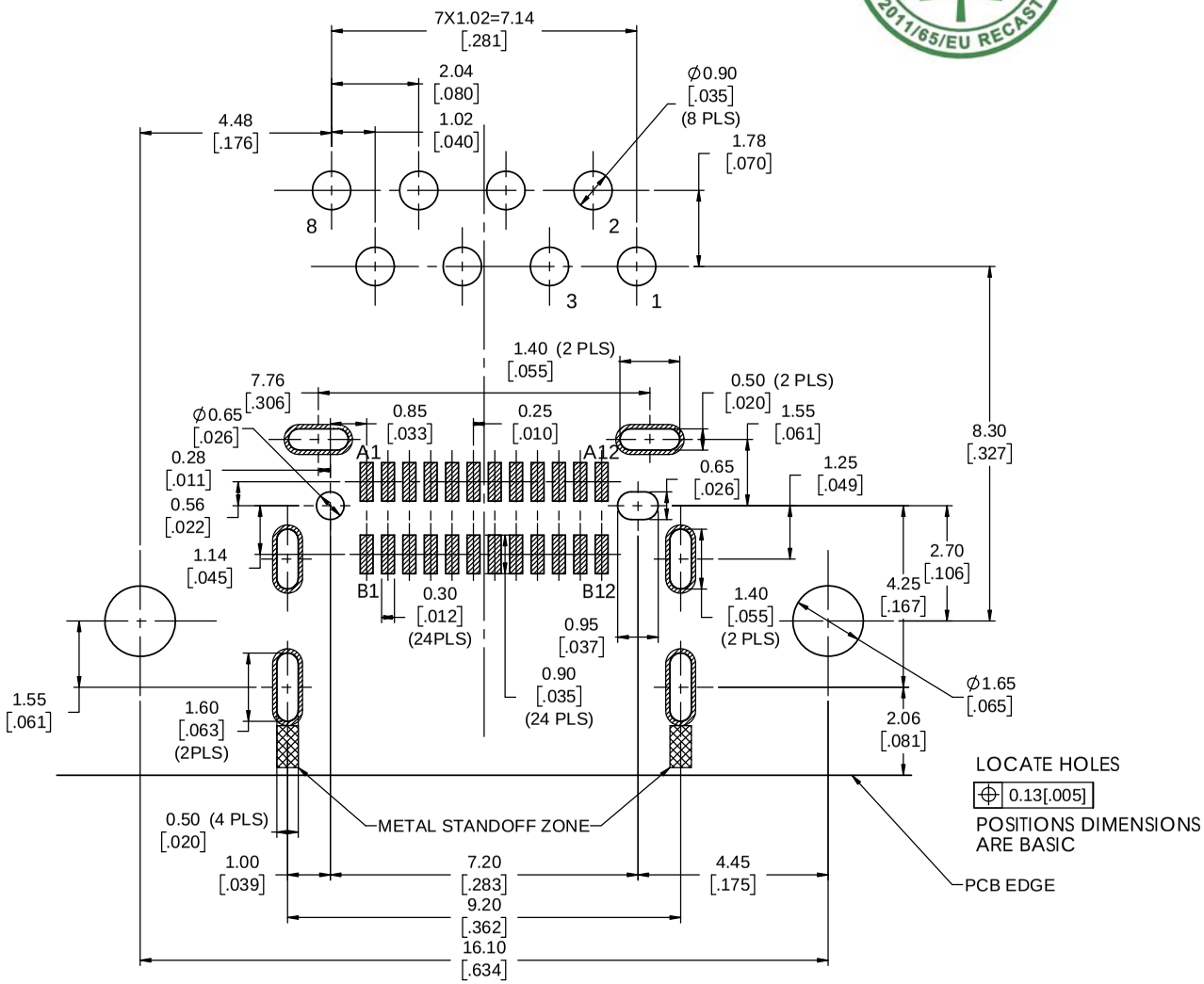

RECOMMENDED P.C.B LAYOUT
COMPONENT SIDE TO BOARD
TOLERANCE: ±[.002]0.05

RECOMMENDED P.C.B THICKNESS: 3.0MM
PAD RING WIDTH: 0.10MM

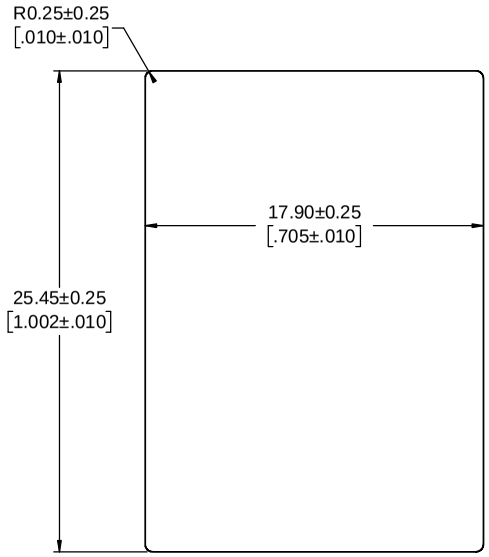

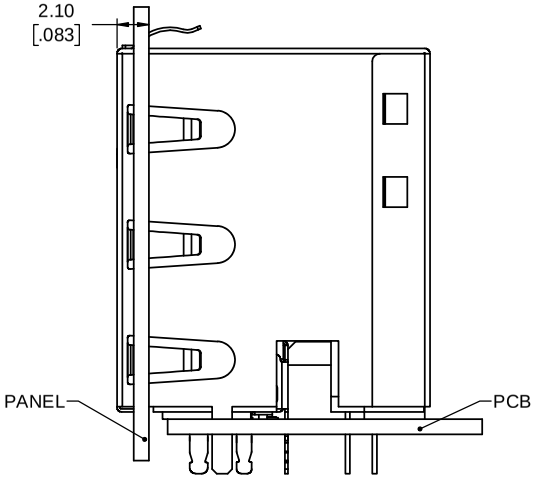

RECOMMENDED PANEL CUT-OUT

UNLESS SPECIFIED OTHERWISE	DRAWN	JACK.GUO	JUL11/18
PRIMARY UNITS MILLIMETERS	CHECKED	L.CHAN	JUL11/18
SECONDARY INCHES	M.E. APP'D		
REFERENCE IN PARENTHESES	Q.A. APP'D		
GENERAL TOLERANCES	DWG APPR.	A.GREEN	JUL11/18
1 DECIMAL PLACE ±0.38	ENG. REL. NO.		
2 DECIMAL PLACES ±0.25	REF.	EAR RJ18136	
3 DECIMAL PLACES ±0.13	THIRD ANGLE PROJECTION		DO NOT SCALE DRAWING
ANGULAR DEGREES ±1.5°			

Amphenol Canada Corp.
Commerical Products

TITLE: RJ45(CAT5e) OVER USB TYPE C MODULAR JACK, 8P8C, SHIELDED WITH TOP AND SIDE TABS, WITHOUT LED, SUITABLE FOR REFLOW PROCESS, ESD TRAY PACKAGE - RoHS COMPLIANT

DWG. NO. P-RJE4E-188-1X01 REV A

CODE ID NO. 03554 | DWG SIZE: X | SCALE: 8:1 | SHEET 2 OF 3

THIS DOCUMENT CONTAINS PROPRIETARY INFORMATION AND SUCH INFORMATION MAY NOT BE DISCLOSED TO OTHERS FOR ANY PURPOSE OR USED FOR MANUFACTURING PURPOSES WITHOUT WRITTEN PERMISSION FROM AMPHENOL CANADA CORP.

Downloaded from Arrow.com.

REVISIONS			
REV	DESCRIPTION, ECN, EAR NO.	DATE	APP'D
A	NEW PROPOSAL RELEASE	OCT.18/17	L.CHAN

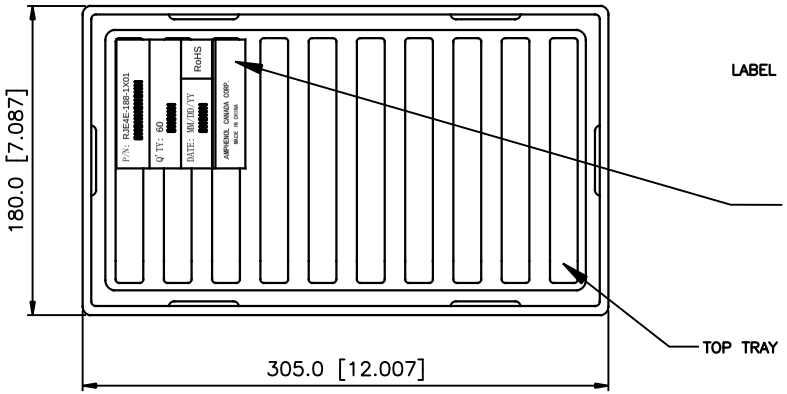

LABEL

P/N: RJE4E-188-1X01

Q'TY: 60

DATE: MM/DD/YY

RoHS

AMPHENOL CANADA CORP.
MADE IN CHINA

SCALE 2:1

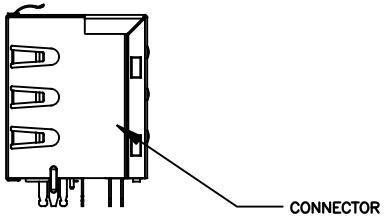

CONNECTOR IS PLACED INTO TRAYS WITH PRESSFIT TAILS DOWN

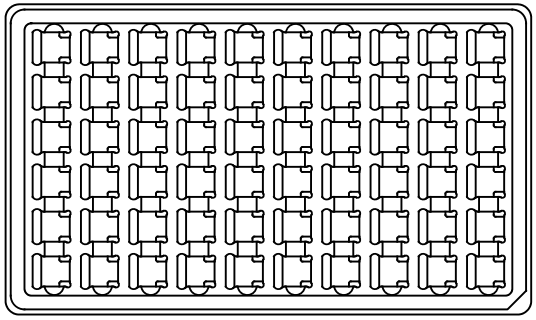

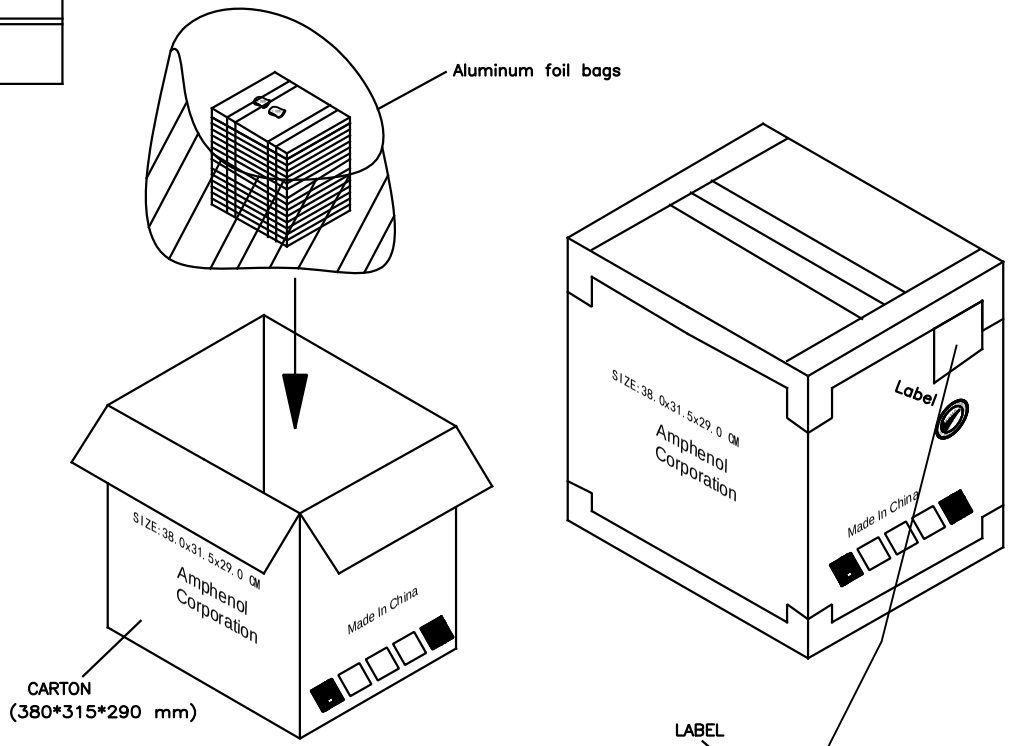

LABEL

(P) Customer Part#: XXXXXX

(1P) Manuf. Part#: RJE4E-188-1X01

(T) Lot#: XXXXXX

(11D) Date Code: YYWW

(Q) Qty: XXXX

(V) Supplier Code: 03554

(4L) Made in: CHINA

Product Desc: RoHS RJ45 JACK CAT5E

SCALE 2:1

NOTES:

PACAKING QUANTITY
1. 60PCS PER TRAY
2. 14 PCS TRAYS PER CARTON
   840 PCS CONNECTORS PER CARTON

UNLESS SPECIFIED OTHERWISE	DRAWN	JACK.GUO	JUL11/18
PRIMARY UNITS MILLIMETERS	CHECKED	L.CHAN	JUL11/18
SECONDARY INCHES	M.E. APP'D		
REFERENCE IN PARENTHESES	Q.A. APP'D		
GENERAL TOLERANCES FOR MM	DWG APP'D	A.GREEN	JUL11/18
1 DECIMAL PLACE ±0.38	ENG. REL. NO.		
2 DECIMAL PLACE ±0.25	REF.	EAR RJ18136	
3 DECIMAL PLACE ±0.13	THIRD ANGLE PROJECTION		DO NOT SCALE DRAWING
ANGULAR DEGREES ±3°			

Amphenol Canada Corp.
Commerical Products

RJ45(CAT5e) OVER USB TYPE C MODULAR JACK, 8P8C, SHIELDED WITH TOP AND SIDE TABS, WITHOUT LED, SUITABLE FOR REFLOW PROCESS, ESD TRAY PACKAGE—ROHS COMPLIANT

DWG NO. P—RJE4E—188—1X01 REV A

CODE ID NO. 03554 | DWG SIZE: X | SCALE: 4:1 | SHEET 3 OF 3

THIS DOCUMENT CONTAINS PROPRIETARY INFORMATION AND SUCH INFORMATION MAY NOT BE DISCLOSED TO OTHERS FOR ANY PURPOSE OR USED FOR MANUFACTURING PURPOSES WITHOUT WRITTEN PERMISSION FROM AMPHENOL CANADA CORP.